VILLAGE OF GLENCOE

675 Village Court, Glencoe, Illinois 60022
p: (847) 835-4114 | info@villageofglencoe.org | Follow Us: @VGlencoe

www.villageofglencoe.org

Virtual Meeting Information

As the Village of Glencoe and its partner agencies continue to follow social distancing requirements and Governor Pritzker's *Restore Illinois* Plan, the April 12, 2021 Zoning Board of Appeals meeting will be held virtually via telephone and video conference (individuals may participate either by telephone or by video conference). Individuals may call the following to participate in the meeting:

By Telephone:
Phone Number: (312) 626-6799
Webinar ID: 993 6422 5974

By Zoom Video Conference:
Zoom video conference link: Click here

Video conference participants using a computer will be prompted to install the Zoom client; participants using smart phones or tablets must download the Zoom app from their app store.

Public Comment Submittal Options

Option 1: Submit Comments by E-Mail Prior to Meeting
Public comments can be submitted in advance of the meeting by e-mail to glencoemeeting@villageofglencoe.org. Public comments received by 6:30 p.m. or one hour before the start of the Zoning Board of Appeals meeting will be read during the ZBA meeting under Public Comment. Any comments received during the meeting may be read at the end of the meeting.

All e-mails received will be acknowledged. Public comment is limited to 400 words or less. E-mailed public comments should contain the following:

- The Subject Line of the e-mail should include the following text: "April 12th ZBA Meeting Public Comment"
- Name of person submitting comment (address can be provided, but is not required)
- Organization or agency person is submitting comments on behalf of, if applicable
- Topic or agenda item number of interest, or indicate if the public comment is on a matter not listed on the ZBA meeting agenda

Option 2: Submit Comments by Phone Prior to Meeting
Individuals without access to e-mail may submit their comments through a voice message by calling (847) 461-1100. Verbal public comments will be read aloud during the meeting and will be limited to three minutes.

AGENDA
VILLAGE OF GLENCOE
ZONING BOARD OF APPEALS
REGULAR MEETING

Virtual Meeting
April 12, 2021
7:30pm

1. **CALL TO ORDER AND ROLL CALL**

   Howard Roin, Chair
   Sara Elsasser
   David Friedman
   Alex Kaplan
   Scott Novack
   John Satter

2. **CONSIDER ADOPTION OF THE FEBRUARY 22, 2021, 2020 ZONING BOARD OF APPEALS MEETING MINUTES.**

3. **CONSIDER A REQUEST FOR A VARIATION TO REDUCE THE REQUIRED SIDE YARD SETBACK AT 679 BIRCH RD.**

4. **CONSIDER REQUESTS FOR VARIATIONS TO REDUCE THE REQUIRED FRONT YARD SETBACK AND INCREASE THE ALLOWABLE GROSS FLOOR AREA AT 252 WALDEN DR.**

5. **CONSIDER A REQUEST FOR A VARIATION TO REDUCE THE REQUIRED SIDE YARD SETBACK AT 485 JEFFERSON AVE.**

6. **ADJOURN**

The Village of Glencoe is subject to the requirements of the Americans with Disabilities Act of 1990. Individuals with disabilities who plan to attend the meeting who require certain accommodations in order to allow them to observe and/or participate in this meeting, or who have questions regarding the accessibility of the meeting or the facilities, are requested to contact the Village of Glencoe at least 72 hours in advance of the meeting at (847) 835-4114, or the Illinois Relay Center at (800) 526-0844, to allow the Village of Glencoe to make reasonable accommodations for those persons.

MINUTES
VILLAGE OF GLENCOE
ZONING BOARD OF APPEALS
SPECIAL MEETING

Village Hall Council Chamber and Videoconference
675 Village Court
Monday, February 22, 2021 – 7:30 PM

1. CALL TO ORDER AND ROLL CALL

The Special Meeting of the Zoning Board of Appeals of the Village of Glencoe was called to order by the Chairman, at 8:47 p.m. on the 22nd day of February 2021, held virtually via Zoom web videoconference.

Attendee Name	Title	Status
Zoning Board of Appeals		
Howard Roin	ZBA Chairman	Present
Sara Elsasser	Member	Present
David Friedman	Member	Present
Alex Kaplan	Member	Present
Scott Novack	Member	Present
John Satter	Member	Present
Village Staff		
Taylor Baxter	Development Services Manager	Present
Rich McGowan	Planner	Present
Village Attorney		Present
Stewart Weiss	Village Attorney	Present

2. CONSIDERATION OF MINUTES OF THE FEBRUARY 1, 2021 ZBA MEETING

RESULT: **ACCEPTED**
AYES: Roin, Elsasser, Friedman, Kaplan, Novack, Satter
NAYS: None
ABSENT: None

3. CONSIDER VARIATION REQUEST AT 239 FRANKLIN ROAD

Taylor Baxter then swore in the applicants and gave a brief overview of the case, stating that the applicants are seeking a variance from the zoning code to allow for the construction of a new single-family home:

1. Section 3-111(C) – To reduce the required front yard setback from 50 feet to 40 feet, a variation of 20%. The ZBA may grant front setback variations up to 20%.

Mr. Baxter explained that the subject property was the site of the Frank-Lloyd-Wright-designed Booth Cottage, which was moved to a Glencoe Park District site in 2020. A building permit was issued for a new home on the property with a setback of 50 feet. However, this setback was incorrectly measured from the curb line, rather than the property line. The front wall of the house was approximately 36 feet from the front property line. Mr. Baxter continued, stating that after the foundation was constructed, Village staff reviewed a foundation survey and alerted the property owner of the incorrect setback, and now the property owner is removing the foundation and will relocate it further back on the lot to meet setback requirements. Mr. Baxter concluded the background of the request by stating the property owner has also reduced the size of the front porch so it meets the criteria from the Zoning Code that would allow it to be in the front setback.

Mr. Baxter then clarified that the 14,087.6-square-foot subject property is undersized for the R-A District, which has a minimum lot size of 20,000 square feet. At approximately 83 feet in width, the lot does not meet the 100-foot minimum lot width for the district either. Mr. Baxter continued, stating that the required front setback for this lot is the average existing front setbacks on the block face, and the required setback cannot be less than 40 feet or more than 50 feet. Mr. Baxter then presented the audience the relevant front setbacks on the block.

Mr. Baxter continued, stating that Franklin Avenue curves slightly along this block, with lots on the west side of the street being deeper near the north and south ends and shallower near the middle of the block, where the subject property is located. Mr. Baxter added that the curving street and variety of lot depths may have helped lead to the variety of setbacks along the block, and that this lack of uniformity of setbacks exists on the west side of the block as well.

Lucas Fuksa, the attorney representing the owner of 239 Franklin Road, stated that this is a unique situation and that the plans were approved by the Village of Glencoe. Mr. Fuksa added that it is obvious that the lot is undersized, mistakes were made, and the reason for the requested variance is to come to a resolution on something that was not brought on by the property owner himself. Mr. Fuksa added that the applicants are trying to be as reasonable as possible.

Cliff Towns, the Architect of Town Studios located at 1297 Shermer Road of Northbrook, IL, is the Architect of 239 Franklin Road. Mr. Towns stated that he has been designing homes for 35 years and has never seen a situation like this before. Mr. Towns concluded that he believes this is a reasonable request, especially with the ravine in the rear yard.

Chairman Howard Roin reiterated that the applicants seek to reduce the required front yard setback from 50 feet to 40 feet, and that in light of the circumstances and lot configuration, he is inclined to agree with the requested variance.

Board Member David Friedman then asked Mr. Towns to explain the drop off in the rear yard, and if there were options for an alternative location for the home on the lot. Mr. Towns

DRAFT

explained that that backyard is limited due to the existing ravine and that the clients requested a design that meets a certain number of bedrooms, vertical elevation, and other design elements that limited Towns' flexibility with the location. Board Member Friedman then asked if the home could be moved to where a variance would not be required, and Mr. Towns responded that it would be against the owner's desires and would not leave much of a backyard. Mr. Fuksa then added that the property owner of 239 Franklin Road already donated the previous home ("Booth Cottage") to the Glencoe Park District.

Village Attorney Stewart Weiss clarified that the applicants are seeking a variance that is permitted through the allowable variance limit of 20% for setbacks.

Chairman Roin clarified that it does not appear as though the Village has received any objection for this request and due to the unique situation, lot size, and ravine in the rear, he believes it should be approved.

PUBLIC COMMENT

Chairman Roin then asked if Village Staff received any comments from the public. Mr. Baxter confirmed that the Village had not received any public comments, and there were no comments made from the audience.

Following consideration of the testimony and discussion, a motion was made and seconded, that the variance request be granted per the drawings presented, making findings and resolving as follows:

FINDINGS

1. The requested variation is within the jurisdiction of the Zoning Board of Appeals.

2. Based on the totality of the relevant and persuasive testimony heard and presented, the Zoning Board determines that:

    a. The requested variation is in harmony with general purpose and intent of the Glencoe Zoning Code.

    b. There are practical difficulties and there is a hardship in the way of carrying out the strict letter of Section 3-111(C)(2) of the Glencoe Zoning Code as applied to the lot in question.

    c. The plight of the owner is due to unique circumstances.

    d. The requested variation will not alter the essential character of the locality.

    e. The requested variation will not set a precedent unfavorable to the neighborhood or to the Village as a whole.

DRAFT

f. The spirit of the Zoning Code will be observed, public safety and welfare will be secured, and substantial justice will be done if the requested variation is granted.

RESOLUTION

NOW THEREFORE BE IT RESOLVED that the request to decrease the front yard setback in order to allow for the construction of a new single-family residence at 239 Franklin Road, be granted as shown in the drawings or plans submitted by the owner and made part of the record.

BE IT FURTHER RESOLVED that the decision of the Development Services Manager is hereby reversed insofar as he denied the issuance of a building permit on the aforesaid property for the aforesaid construction;

BE IT FURTHER RESOLVED that this variation shall expire and be of no further force or effect at the end of twelve (12) months unless during said twelve-month period a building permit is issued, and construction begun and diligently pursued to completion; and

BE IT FURTHER RESOLVED that this resolution shall be spread upon the records of the Board and shall become a public record.

RESULT:	**ACCEPTED [UNANIMOUS]**
AYES:	Roin, Elsasser, Novack, Satter
NAYS:	Friedman
ABSENT:	Kaplan

5. ADJOURN

Chairman Roin asked if there was any further public comment. Hearing none, the meeting was adjourned at 9:19 p.m.

DRAFT

675 Village Court, Glencoe, Illinois 60022
p: (847) 835-4111 | info@villageofglencoe.org | Follow Us: @VGlencoe
www.villageofglencoe.org

Zoning Board of Appeals (ZBA) Application

Section A: Application Information

Check all that apply:

- [x] Request for variation(s) from the zoning code
- [ ] Appeal of an order, determination, or decision made by Village staff based on the zoning code

Subject property address: 679 Birch Rd, Glencoe IL 60618

Applicant name: Paul and Sarah Wine Applicant phone: 312-498-1223

Applicant email: pwine2@yahoo.com

Owner name (if different from applicant): _____

Owner phone: _____ Owner email: _____

Brief description of project:

We are building a new home at 679 Birch. Our original architecture plan has a chimney that extends into the setback on the west side of the building. The entire house is in the set back limits provided by the village of Glencoe, minus the chimney.

Variation request(s):

We are requesting a variation to maintain our original architecture plans and extend the chimney two feet beyond the west side set back.

675 Village Court, Glencoe, Illinois 60022
p: (847) 835-4111 | info@villageofglencoe.org | Follow Us: @VGlencoe

Section B: Standards for Variations

For applications for variations, provide a brief response to the following prompts. Use this form or attach a separate letter to this application. The full text of the standards for the approval of variations can be found in Sec. 7-403(e) of the zoning code.

1. Why are the requested variations necessary? What hardship or practical difficulty would result if they are not approved? Include a description of any exceptional physical characteristics of the property (for example, unusual size, shape, topography, existing uses or structures, etc.), if applicable.

The requested variation is necessary to maintain our origial architecture plans and prevent a redesign. We also feel that having a chimney outside the house rather than inside the house may be safer for our young children.

675 Village Court, Glencoe, Illinois 60022
p: (847) 835-4111 | info@villageofglencoe.org | Follow Us: @VGlencoe
www.villageofglencoe.org

2. Describe how the proposed variations would result in a development that is not detrimental to adjacent or nearby properties or the public good.

The variation would not effect anyones view or structural integrity of neighboring property. The variance is only a 2 foot by 6 foot chimney (12 square feet) that will not impinge significantly on the property just west of 679 Birch.

3. Describe any efforts the applicant has made to solicit feedback on the proposed variations from neighboring or nearby property owners or residents. What was the result of these efforts?

We have spoken to our neighbor on the west side regarding a variance change. He seems to be open to our small modifications.

Section C: Petition for Appeal

Provide a separate letter describing the order, determination, procedures, or failure to act being appealed. Applicants only applying for variations from the zoning code do not need to provide this letter.

675 Village Court, Glencoe, Illinois 60022
p: (847) 835-4111 | info@villageofglencoe.org | Follow Us: @VGlencoe

Section D: Acknowledgement and Signature

☑ *I hereby acknowledge that all information provided in this application is true and correct.*

	2/26/2021
Applicant's signature	Date
Owner's signature (if different than applicant)	Date

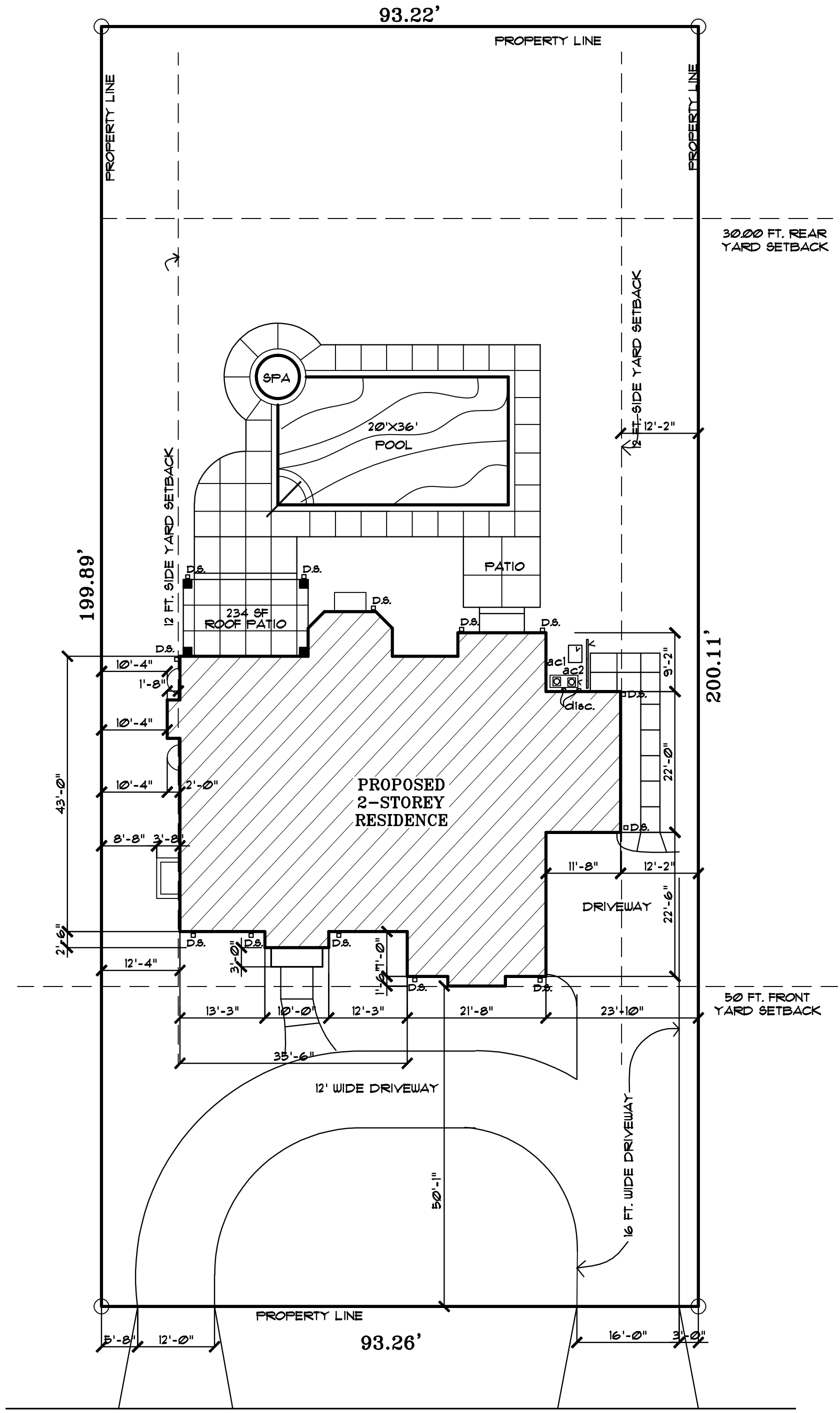
93.22'
PROPERTY LINE
PROPERTY LINE
PROPERTY LINE
30.00 FT. REAR YARD SETBACK
12 FT. SIDE YARD SETBACK
12 FT. SIDE YARD SETBACK
SPA
20'X36'
POOL
PATIO
234 SF
ROOF PATIO
D.S.
199.89'
200.11'
10'-4"
1'-8"
10'-4"
10'-4"
2'-0"
43'-0"
8'-8"
3'-8"
2'-6"
12'-4"
ac1
ac2
disc.
9'-2"
22'-0"
PROPOSED
2-STOREY
RESIDENCE
11'-8"
12'-2"
DRIVEWAY
22'-6"
3'-0"
1'-6"
1'-0"
13'-3"
10'-0"
12'-3"
21'-8"
23'-10"
50 FT. FRONT YARD SETBACK
35'-6"
12' WIDE DRIVEWAY
16 FT. WIDE DRIVEWAY
50'-1"
PROPERTY LINE
5'-8"
12'-0"
93.26'
16'-0"
3'-0"

BIRCH ROAD

VILLAGE OF GLENCOE
MEMORANDUM
675 Village Court, Glencoe, Illinois 60022
p: (847) 835-4111 | info@villageofglencoe.org | Follow Us: @VGlencoe
www.villageofglencoe.org

Zoning Board of Appeals Memorandum

DATE: April 5, 2021

TO: Zoning Board of Appeals

FROM: Taylor Baxter, AICP, Development Services Manager
Rich McGowan, Planner

SUBJECT: Consideration of variation to allow a chimney of a new single-family residence to encroach into the required side setback at 679 Birch Road

---

Background: The applicants are requesting a variation from the Zoning Code to allow the chimney of a new single-family residence to encroach into the required side yard setback. The subject property is in the RA Single-family Residential Zoning District.

In November 2020, the ZBA approved a variation to increase the gross floor area for this property. The proposed house is the same as that which was approved by the ZBA in 2020. However, the applicants did not request a setback variation for the chimney due to a belief that it could extend into the setback. During building permit review, Village staff informed the applicants that a variation would be needed for the proposed encroachment.

The requested variation is from the following standard in the Zoning Code:

1. *Section 3-111(C)(i) – To reduce the required side yard setback from 12 feet to 10.33 feet, a variation of 13.9%*

The ZBA may grant variations to reduce the required setback by up to 20%.

	Existing	Required	Proposed	Variation %
Side setback	New construction	12 ft	10.33 ft	13.9%

Analysis: The Zoning Code includes the following standards for the consideration of variation requests:

1.) *General Standard. No variation shall be granted pursuant to this Section unless the applicant shall establish that carrying out the strict letter of the provisions of this Code would create a particular hardship or a practical difficulty. Such a showing shall require proof that the variation being sought satisfies each of the standards set forth in this subsection.*

The applicants have stated that they are requesting the setback variation to allow them to keep the original design of the house, which was previously reviewed by the ZBA in November 2020. At that time, the applicant only requested a gross floor area variation. At the time of permitting, Village staff informed the applicant that a setback variation would be needed for the chimney to remain as proposed.

2.) *Unique Physical Condition. The subject property is exceptional as compared to other lots subject to the same provision by reason of a unique physical condition, including presence of an existing use, structure, or sign, whether conforming or nonconforming; irregular or substandard shape or size; exceptional topographical features; or other extraordinary physical conditions peculiar to and inherent in the subject property that amount to more than a mere inconvenience to the owner and that relate to or arise out of the lot rather than the personal situation of the current owner of the lot.*

The subject property is nonconforming in terms of both lot size and lot width. The minimum lot width in the RA district is 100 feet, with the subject property being 93.26 feet wide. The lot is not unusual in shape or topography and there are many lots of similar size nearby in the RA district.

3.) *Not Self-Created. The aforesaid unique physical condition is not the result of any action or inaction of the owner, or of the owner's predecessors in title and known to the owner prior to acquisition of the subject property, and existed at the time of the enactment of the provisions from which a variation is sought or was created by natural forces or was the result of governmental action, other than the adoption of this Code, for which no compensation was paid.*

Although the applicant is proposing a new home, the size and width of the lot are not self-created.

4.) *Not Merely Special Condition. The alleged hardship or difficulty is not merely the inability of the owner or occupant to enjoy some special privilege or additional right not available to owners or occupants of other lots subject to the same provision, nor merely an inability to make more money from the use of the subject property; provided, however, that where the standards herein set out exist, the existence of an economic hardship shall not be a prerequisite to the grant of an authorized variation.*

The purpose of the variation is not based exclusively on a desire to make more money from the property. However, the right encroach into the side setback is not a right available to other property owners without the approval of a variance.

5.) *Code and Plan Purposes. The variation would not result in a use or development of the subject property that would be not in harmony with the general and specific purposes for which this Code and the provision from which a variation is sought were enacted.*

The proposed encroachment would not result in a development likely to be significantly out of harmony with the purpose of the code. A 10.33-foot setback would be allowed in all other zoning residential zoning districts, and the subject property is nonconforming in the RA district in terms of lot width.

6.) Essential Character of the Area. The variation would not result in a use or development on the subject property that:

(a) Would be materially detrimental to the public welfare or materially injurious to the enjoyment, use, development, or value of property or improvements permitted in the vicinity; or
(b) Would materially impair an adequate supply of light and air to the properties and improvements in the vicinity; or
(c) Would substantially increase congestion in the public streets due to traffic or parking; or
(d) Would unduly increase the danger of flood or fire; or
(e) Would unduly tax public utilities and facilities in the area; or
(f) Would endanger the public health or safety.

The proposed variation would result in a chimney that is 1.66 feet closer to the west property line than would be allowed without a variation. While there would be some visual impact on the neighboring property to the west, the footprint of the encroachment would be limited to approximately 12 square feet.

This variation request received printed public notice at least 15 days prior to the public hearing. Additionally, owners of properties within 200 feet of the subject property were notified.

Recommendation: Based on the materials presented and the public hearing, it is the recommendation of staff that the variation request of be accepted or denied.

Motion: The Zoning Board of Appeals may make a motion as follows:

Move to accept/deny the request for a variation to allow a chimney to encroach into the required side yard setback at 679 Birch Road.

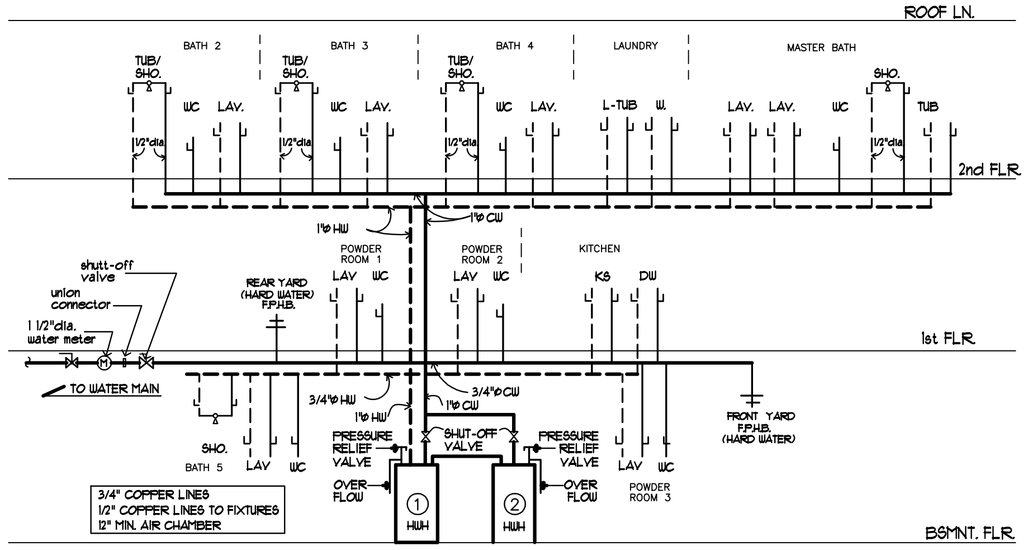

HOT & COLD WATER RISER DIAGRAM

NOT TO SCALE

NOTE:
PLUMBER MUST PROVIDE WATER SHUT-OFF VALVES BOTH SIDES OF WATER METER.
PROVIDE 1/2" CONDUIT FROM WATER METER THRU OUTSIDE WALL FOR REMOTE METER READER PAD & LOCATE NEAR GAS METER.
CONTINUE 1 1/2" COPPER WATER FROM METER TO WATER HEATER

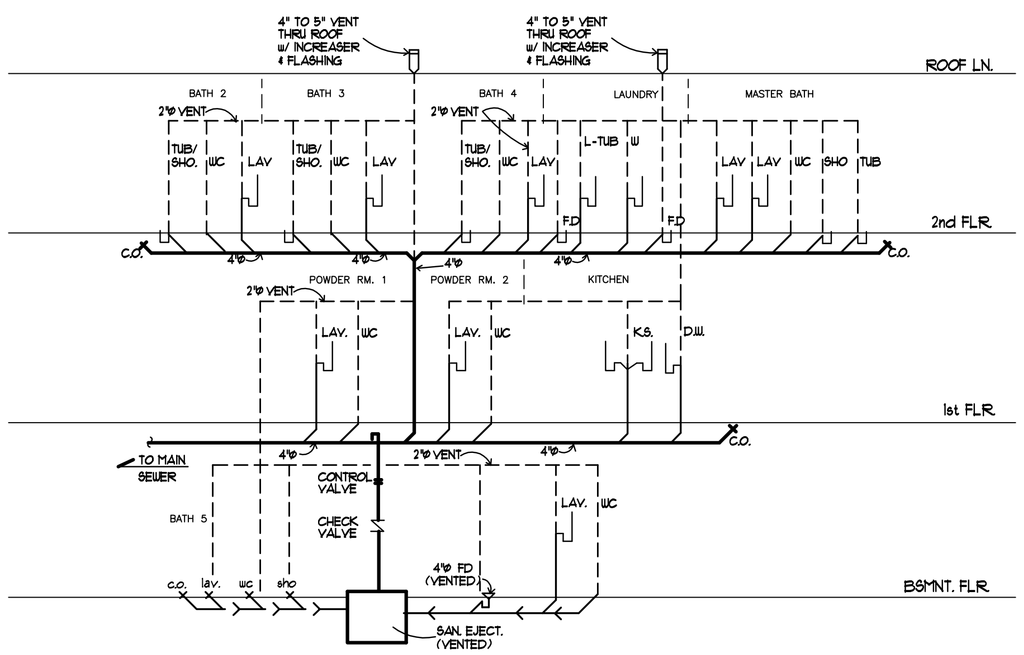

SOIL & WASTE RISER DIAGRAM

NOT TO SCALE

NOTE:
UNDERGROUND SEWER LINES (INTERIOR OR EXTERIOR) TO BE SCH 40 OR SDR-26 PVC.

NOTE:

1.) SHOWER & SHOWER BATH COMBINATIONS SHALL BE PROVIDED WITH AN AUTOMOTIC SAFETY WATER MIXING DEVICE WITH A MAXIMUM SETTING OF 115 DEGREES FAHRENHEIT AT TIME OF INSTALLATION.

2.) HEATED WATER PIPES MUST BE INSULATED WITH A R-VALUE BASED UPON PIPE SIZING.

3.) CIRCULATING WATER SYSTEM SHALL HAVE AN ON/OFF SWITCH.

4.) STORM SUMP PIT SHALL BE 2" ABOVE FINISHED FLOOR, AND HAVE A SEALED COVER.

WATER SUPPLY FIXTURE UNITS (WSFU) FOR A SUPPLY SYSTEM WITH FLUSH TANKS			
FIXTURE	QUANTITY	LOAD VALUES(WSFU)	
		LOAD	TOTAL
water closet	8	3	24
lavatory	8	1	8
b. tub/sho.	6	2	12
kit. sink	2	2	4
dishwasher	3	1	3
laundry tub	1	3	3
laund. mach.	2	2	4
TOTAL			58
SERVICE SIZE (PROPOSED)			1½"
SERVICE SIZE (REQ'D PER VILL.)			1½"
METER SIZE (REQ'D PER VILL.)			1"

NOTE:
PLUMBER MUST PROVIDE WATER SHUT-OFF VALVES BOTH SIDES OF WATER METER.
PROVIDE 1/2" CONDUIT FROM WATER METER THRU OUTSIDE WALL FOR REMOTE METER READER PAD & LOCATE NEAR GAS METER.
ALL TOUCH PADS MUST BE LOCATED OUTSIDE OF ANY FENCED IN AREAS. NO EXCEPTIONS WILL BE ALLOWED

CONTINUE 1 1/2" COPPER WATER FROM METER TO WATER HEATER

NOTICE:
ALL DRAIN, WASTE AND VENT PIPING SHALL BE TESTED PRIOR TO ENCLOSING. SUCH TEST SHALL BE DONE BY FILLING THE ENTIRE SYSTEM WITH WATER. WHEN WEATHER CONDITIONS PRECLUDE WATER TESTING. THE ENTIRE SYSTEM SHALL BE PUT UNDER AIR PRESSURE AT 5 LBS FOR A PERIOD OF FIFTEEN (15) MINUTES.

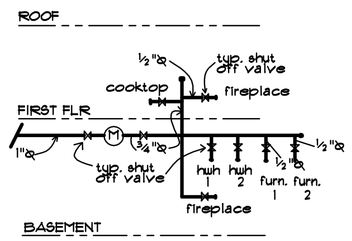

GAS RISER DIAGRAM

ALL GAS PIPING NEEDS TO MEET GLENCOE MUNICIPAL CODE 15-4-4 ALL GAS DISTRIBUTION PIPING SHALL BE MADE OF RIGID METALLIC MATERIAL WHEN ABOVE GRADE.

ALL GAS APPLIANCES SHALL BE PROVIDED WITH A SHUT-OFF VALVE. THE SHUT-OFF VALVE SHALL BE LOCATED IN THE SAME ROOM AS THE APPLIANCE. THE SHUT-OFF VALVE SHALL BE WITH-IN 6 FEET OF THE APPLIANCE, AND SHALL BE INSTALLED UPSTREAM OF THE UNION CONNECTOR OR QUICK DISCONNECT DEVICE IT SERVES. ALL GAS PIPING SYSTEM SHALL MEET 2015 IRC SECT G2420.

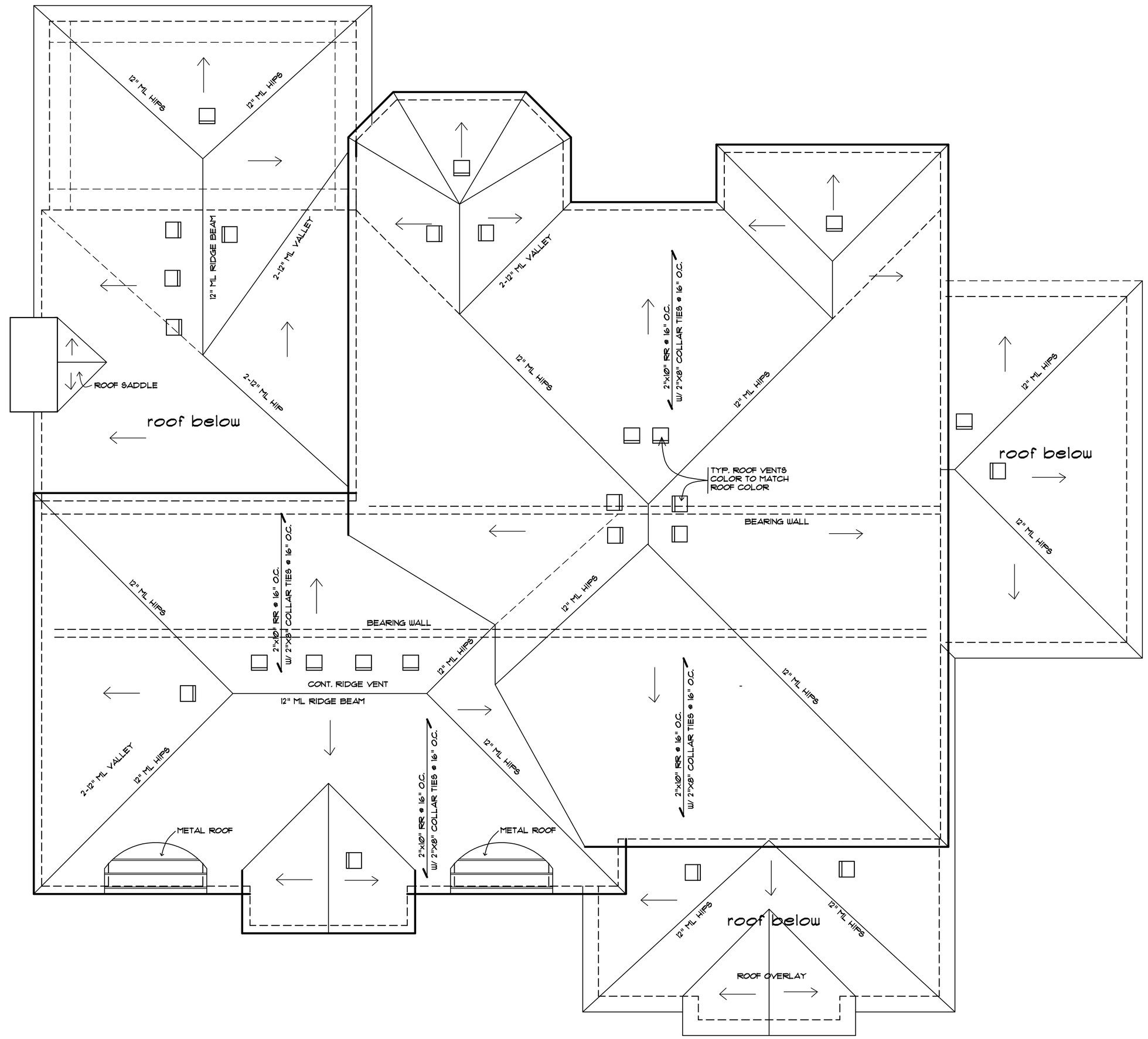

ROOF PLAN

SCALE: 1/4'=1'-0"

These drawings are, and shall remain, the exclusive property of Ruben L. Anastacio & Associates and are released for construction purposes only. Reproduction in part or in whole without the express written permission of Ruben L. Anastacio & Associates, is strictly prohibited. Violators will be subjected to compensatory, damages thru legal action.

PROJECT

PROPOSED 2-STORY RESIDENCE FOR:
PAUL & SARAH WINE
679 BIRCH
GLENCOE, ROAD
ILLINOIS

184-004627

RUBEN L. ANASTACIO & ASSOCIATES, LTD.
architects
4256 N. ARLINGTON HTS. RD.
SUITE # 203
ARLINGTON HTS., IL. 60004
TEL (847) 398-7254
CELL 847-812-1558

COPYRIGHT-2020

REVISIONS

JOB NO. 1120A

DATE: 11/11/20

DRAWN BY R.L.A.

APPROVED BY R.L.A.

SHEET NO.

A-8

OF ELEVEN

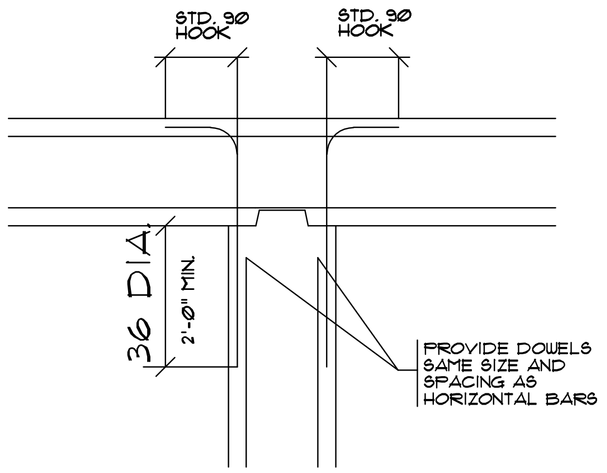

WALL INTERSECTION DETAIL

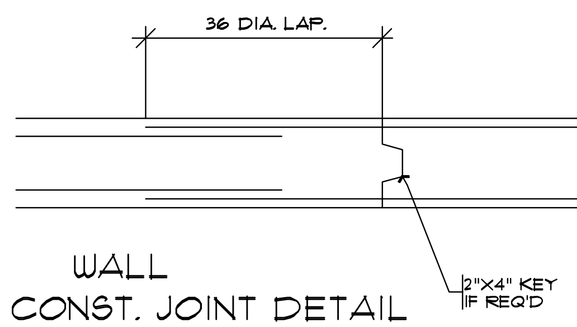

WALL CONST. JOINT DETAIL

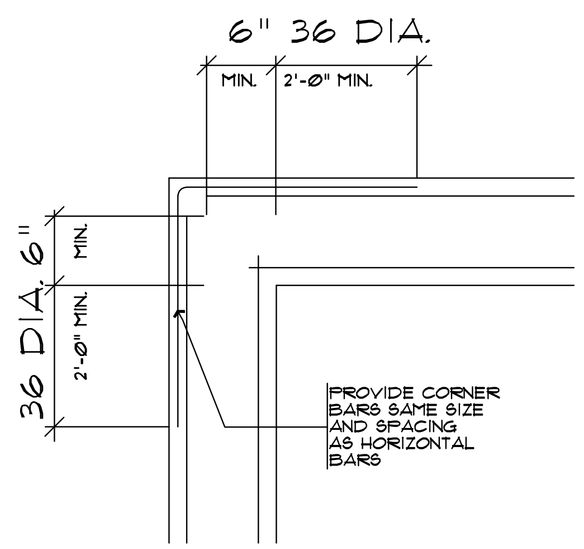

WALL CORNER DETAIL

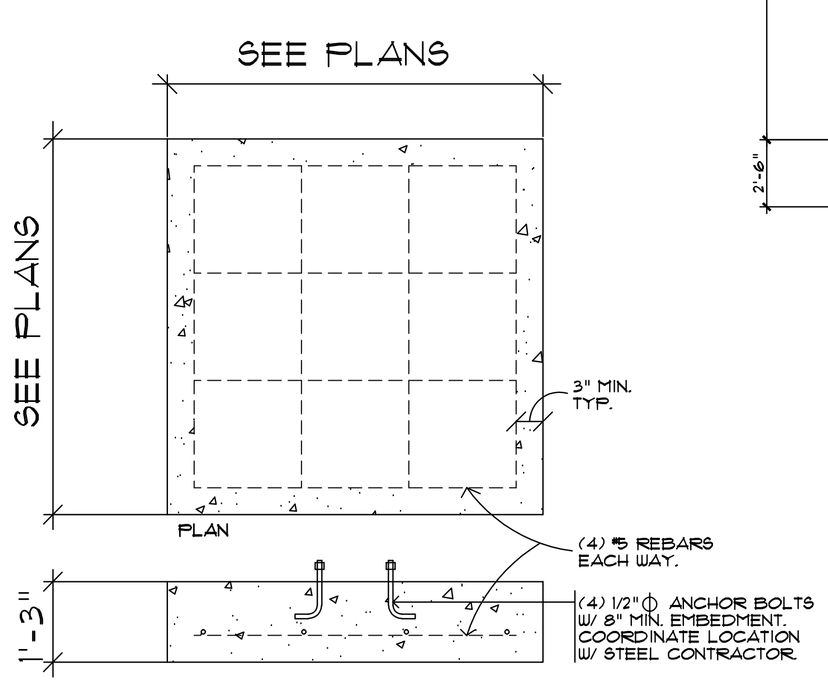

TYP. COLUMN FOOTING DETAIL

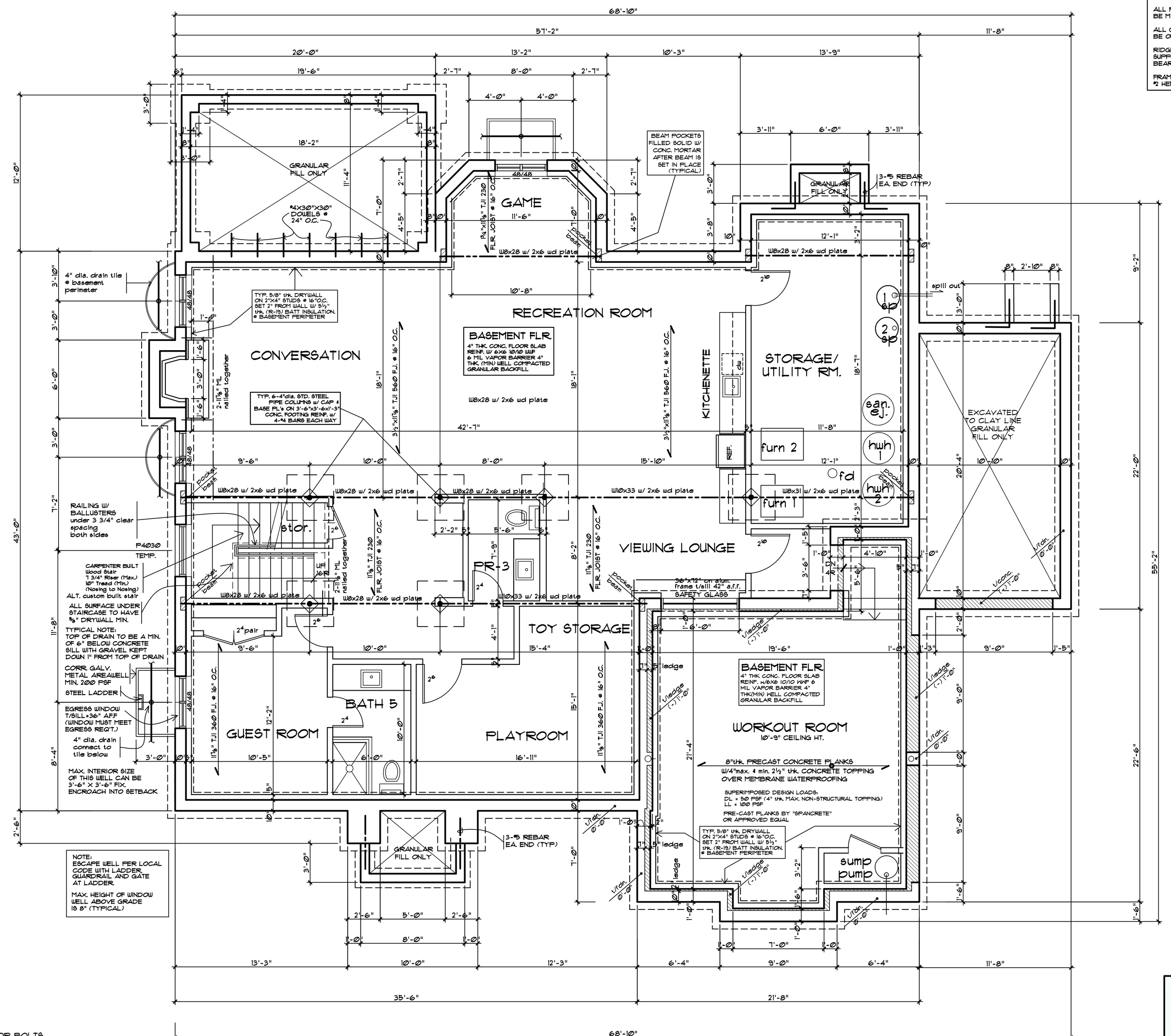

NOTE:
ESCAPE WELL PER LOCAL CODE WITH LADDER, GUARDRAIL AND GATE AT LADDER.

MAX. HEIGHT OF WINDOW WELL ABOVE GRADE IS 8" (TYPICAL)

NOTE:

ALL PLUMBING WALLS TO BE MINIMUM OF 2" X 6".

ALL CEILING JOISTS MUST BE ON LOAD BEARING WALLS.

RIDGE BEAM MUST BE SUPPORTED & SPREAD TO THE BEARING WALLS AND COLLAR TIES.

FRAMING LUMBER SHALL BE GRADE #2 HEM. FIR. U.N.O.

FOUNDATION/BASEMENT FLOOR PLAN

SCALE: 1/4"=1'-0"

2018 IECC INSULATION & U-FACTORS FOR PRESCRIPTIVE METHOD OF COMPLIANCE (CLIMATE ZONE 5)									
FENEST. U-FACTOR	SKYLIGHT U-FACTOR	GLAZED FENEST. SHGC	CEILING R-VALUE	WOOD FRAME WALL R-VALUE	MASS WALL R-VALUE	FLOOR R-VALUE	BASEMENT WALL R-VALUE	SLAB R-VALUE & DEPTH	CRAWL WALL R-VALUE
0.32	0.55	NR	49	20 or 13 + 5	13 / 17	30	15 / 19	10, 2 FT	15 / 19

These drawings are, and shall remain, the exclusive property of Ruben L. Anastacio & Associates and are released for construction purposes only. Reproduction in part or in whole without the express written permission of Ruben L. Anastacio & Associates, ltd. is prohibited and violators will be subjected to compensatory, damages thru legal action.

PROJECT

PROPOSED 2-STORY RESIDENCE FOR:
PAUL & SARAH WINE
679 BIRCH
GLENCOE, ROAD
ILLINOIS

184-004627

RUBEN L. ANASTACIO & ASSOCIATES, LTD.
architects
4256 N. ARLINGTON HTS. RD.
SUITE # 203
ARLINGTON HTS., IL. 60004
TEL (847) 398-7254
CELL 847-812-1558

COPYRIGHT-2020

REVISIONS

JOB NO. 1120A
DATE: 11/11/20
DRAWN BY R.L.A.
APPROVED BY R.L.A.
SHEET NO.
A-2
OF ELEVEN

LINTEL SCHEDULE

SPAN	SIZE
Ø 4'	2-2"X6"
Ø 6'	2-2"X8"
Ø 8'	2-2"X10"
Ø 10'	2-2"X12"
Ø 10' - 16' refer to floor plan for others MINIMUM END BEARING = 3"	2-2"X12"+3/8" flitch plate bolted together (or as specified on plan)

NOTE :
LIGHTING OUTLETS PROVIDED FOR CLOSETS SHALL BE INSTALLED AS STIPULATED IN ARTICLE 410 SECTION 8 OF THE NATIONAL ELECTRICAL CODE, 2003 EDITION.

EXAMPLE :

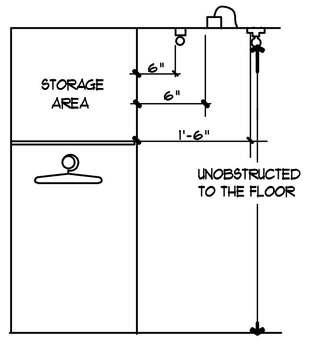

EXCEPTION:-
A LIGHT FIXTURE THAT USES A GLASS GLOBE OVER THE BULB MAY BE INSTALLED WITHIN 6" OF THE FRONT EDGE OF THE SHELF. THE MEASUREMENT SHALL BE MADE FROM THAT PORTION OF THE FIXTURE NEAREST THE SHELF.

TYP. STANDARD CLOSET LIGHTING DETAIL

NOT TO SCALE

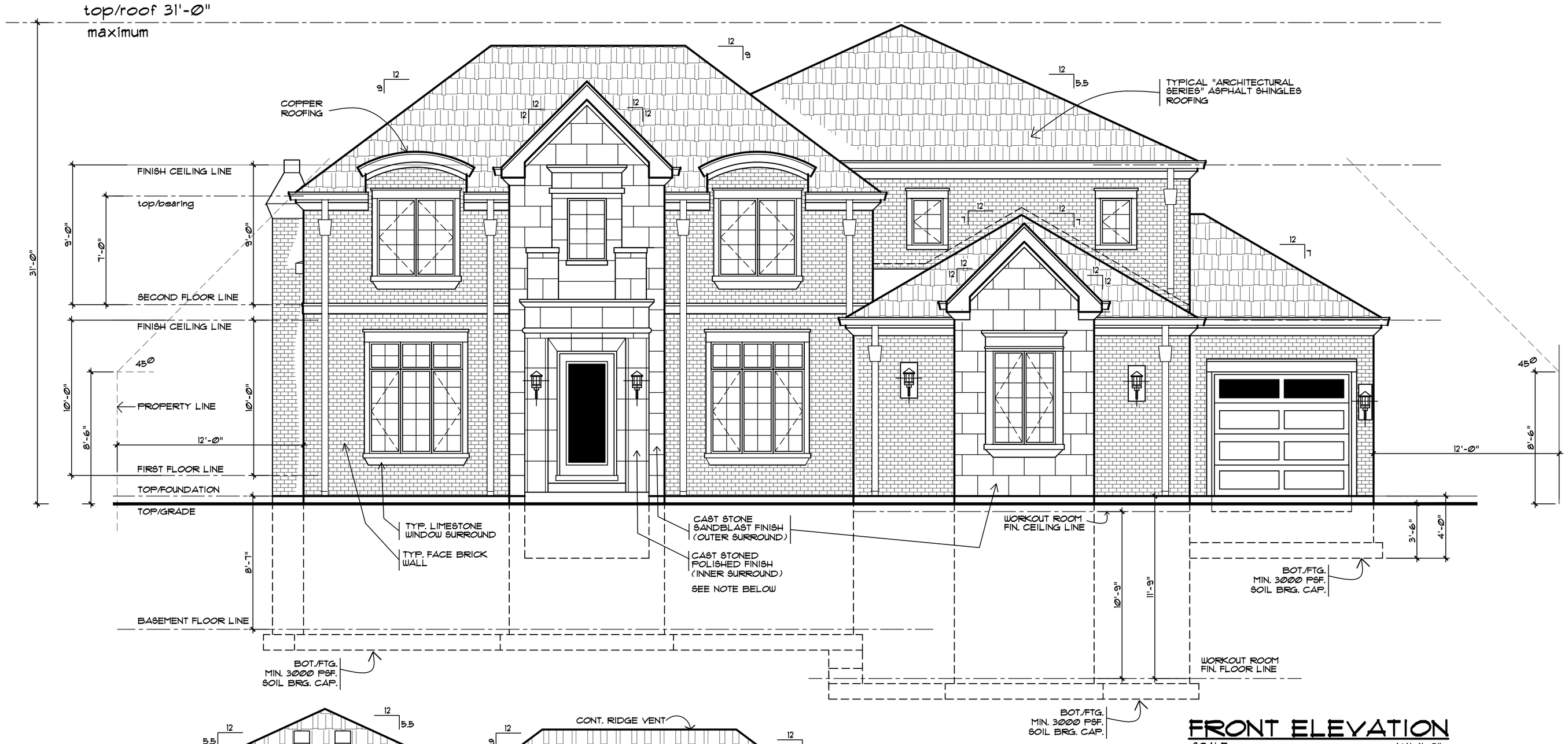

FRONT ELEVATION

SCALE: 1/4'=1'-0"

NOTE:
CAST STONE ENTRANCE FINISH IS AS FABRICATED BY "VALDER STONE & MARBLE INC." AND AS DISTRIBUTED BY "ILLINOIS BRICK"
CONTACT JIM O'GRADY - 708-912-8583
DESIGN MODIFICATION IS WELCOME BUT MUST BE APPROVED BY "OWNER" AND/OR "ARCHITECT" BEFORE CONSTRUCTION

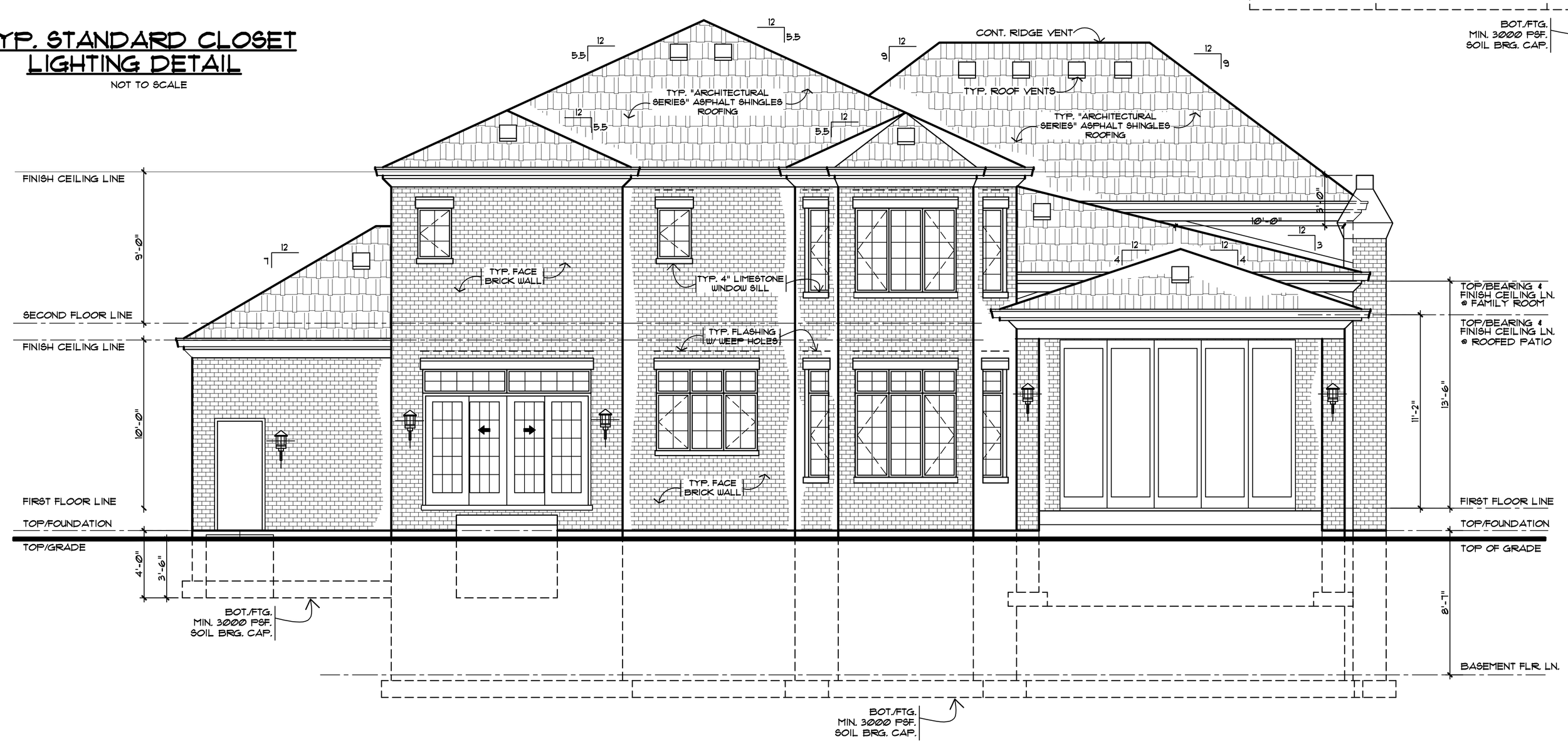

REAR ELEVATION

SCALE: 1/4'=1'-0"

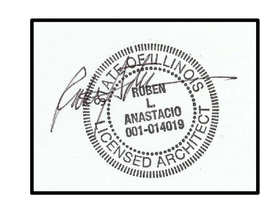

These drawings are, and shall remain, the exclusive property of Ruben L. Anastacio & Associates and are released for construction purposes only. Reproduction in part or in whole without the express written permission of Ruben L. Anastacio & Associates is strictly prohibited. Violators will be subjected to compensatory damages thru legal action.

PROJECT

PROPOSED 2-STORY RESIDENCE FOR:
PAUL & SARAH WINE
679 BIRCH
GLENCOE, ROAD
ILLINOIS

184-004627

RUBEN L. ANASTACIO & ASSOCIATES, LTD.
architects
TEL (847) 398-7254
CELL 847-812-1558
4256 N. ARLINGTON HTS. RD.
SUITE # 203
ARLINGTON HTS., IL. 60004

COPYRIGHT-2020

REVISIONS

JOB NO. 1120A
DATE: 11/11/20
DRAWN BY R.L.A.
APPROVED BY R.L.A.
SHEET NO.
A-5
OF ELEVEN

NOTES:

CHIMNEY FIREBLOCKING
All spaces between chimney, floors and ceilings through which chimney pass shall be fireblocked with noncombustible material securely fastened wood joists, beams or headers shall be to depth of 1 inch (25.4 mm) and shall only be placed on strips of metal or metal lath laid across the spaces between comustible material and the chimney.

CHIMNEY CLEARANCES
Any portion of a masonry chimney located in the interior of the building or within the exterior wall of the building shall have a minimum air space clearance to combustibles of 2 inches (51 mm). Chimney located entirely outside the exterior walls of the building, including chimneys that pass through soffit or cornice, shall have a minimum air space clearance of 1 inch (25.4 mm). The air space shall not be filled, except to provide fire blocking in accordance with Section R1001.16.

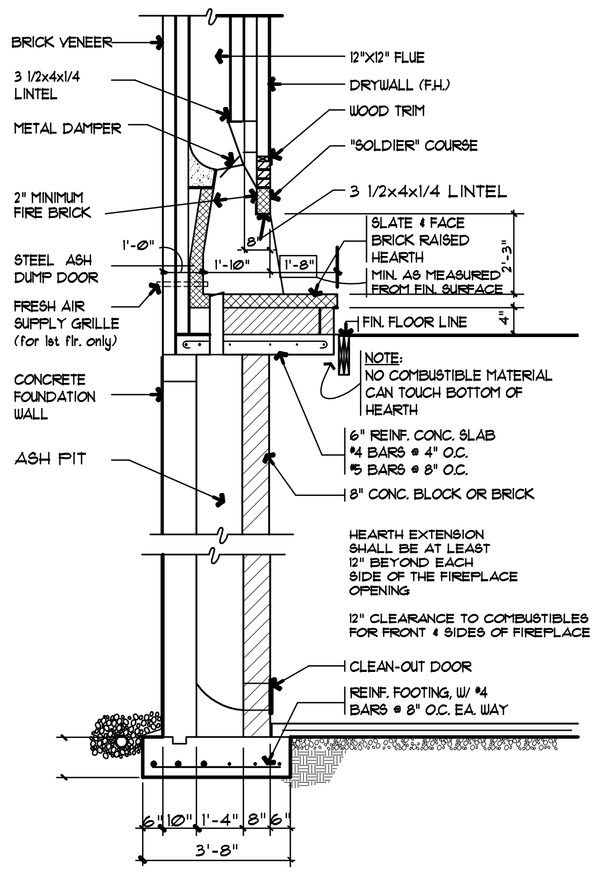

FIREPLACE SECTION RAISED HEARTH

NOT TO SCALE

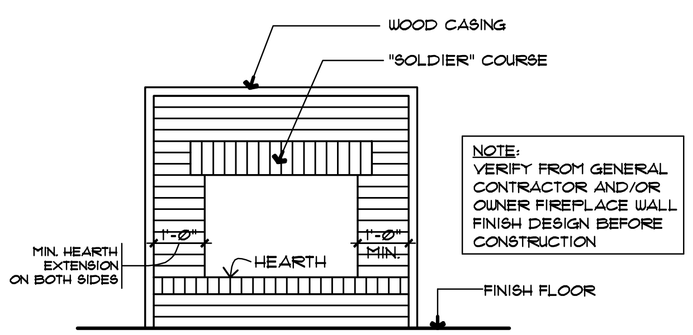

FIREPLACE ELEVATION

NOT TO SCALE

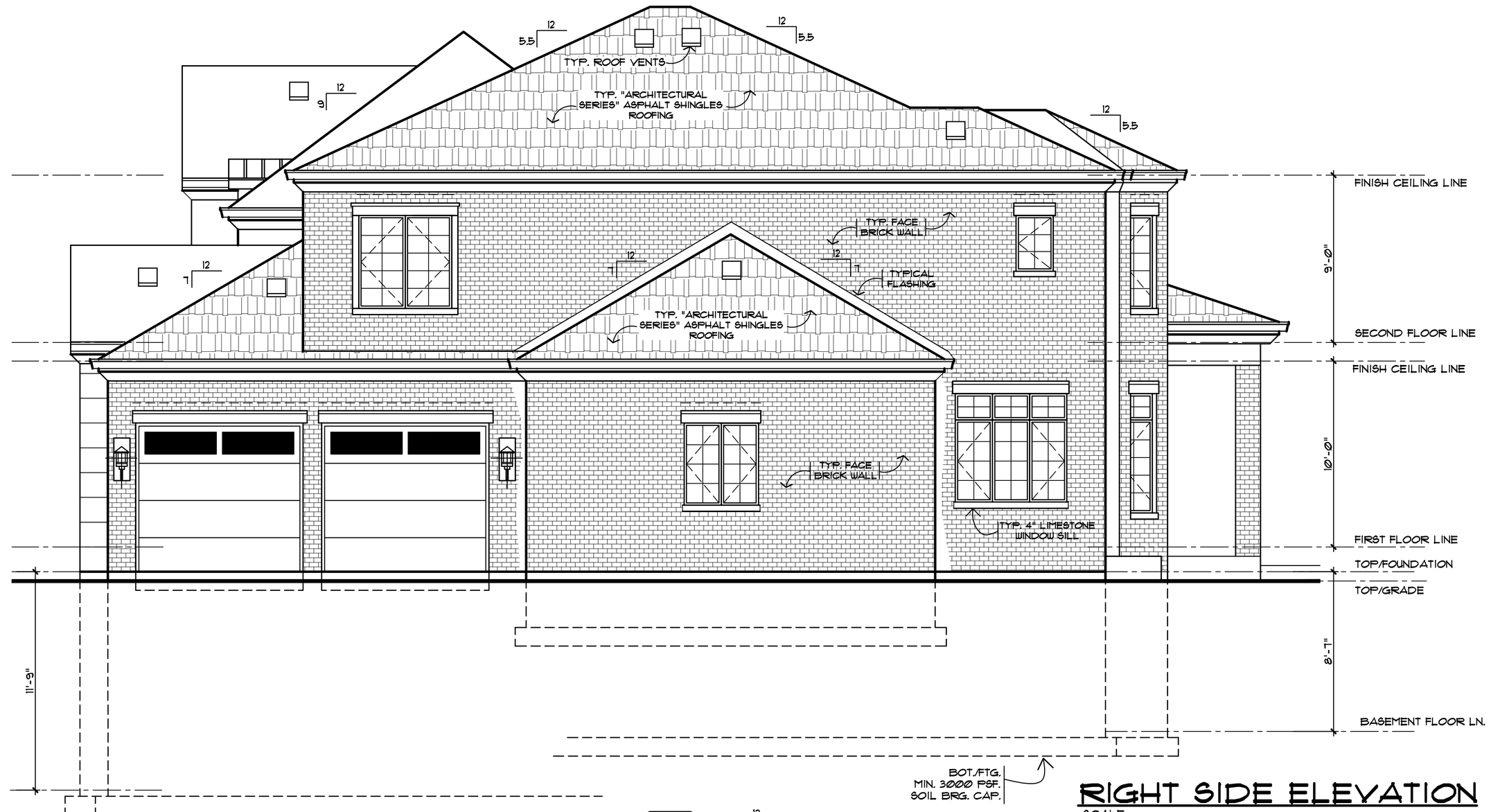

RIGHT SIDE ELEVATION

SCALE: 1/4"=1'-0"

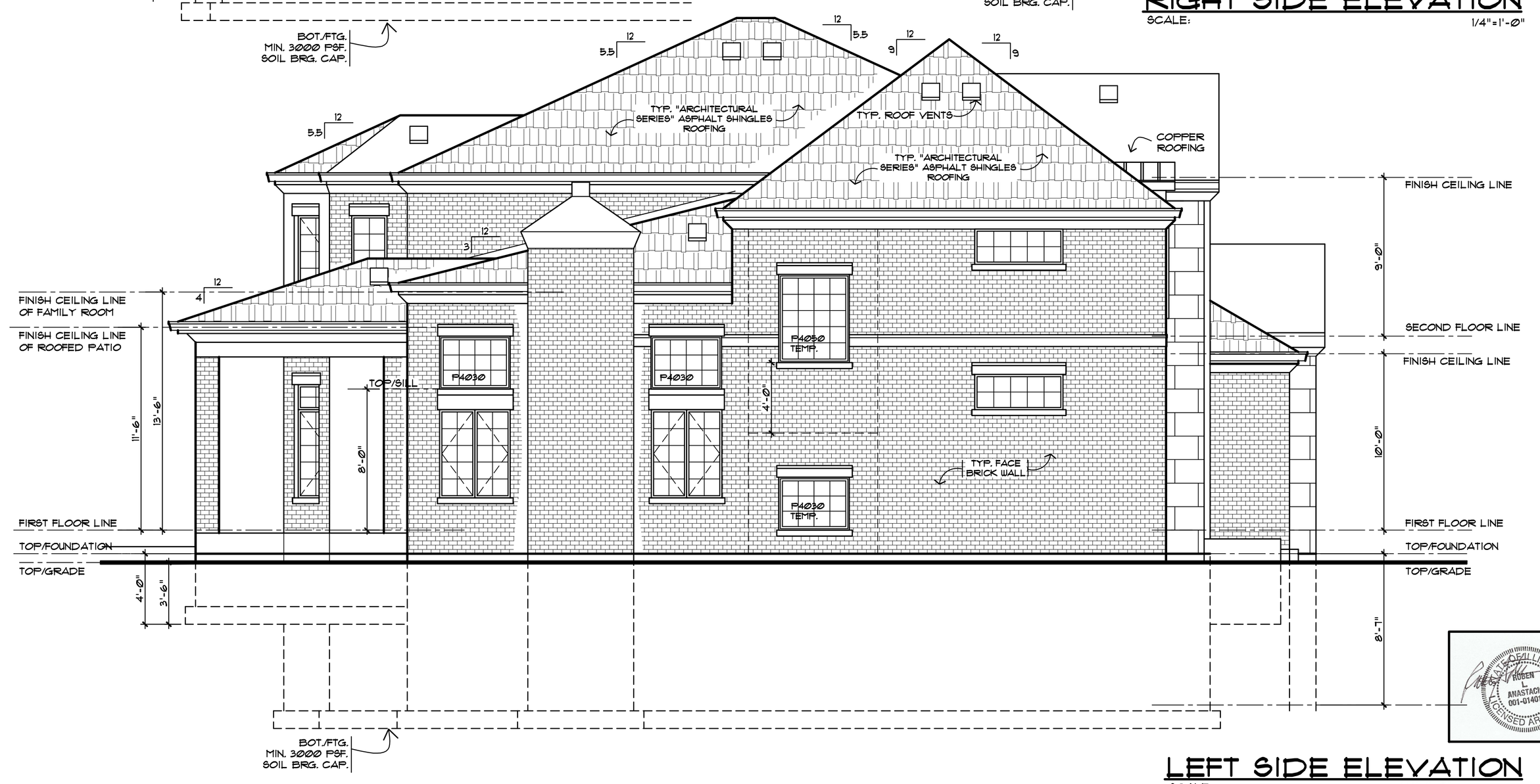

LEFT SIDE ELEVATION

SCALE: 1/4"=1'-0"

These drawings are, and shall remain, the exclusive property of Ruben L. Anastacio & Associates and are released for construction purposes only. Reproduction in part or in whole without the express written permission of Ruben L. Anastacio & Associates is strictly prohibited. Violations will be subjected to compensatory damages thru legal action.

PROJECT

PROPOSED 2-STORY RESIDENCE FOR:
PAUL & SARAH WINE
679 BIRCH
GLENCOE, ROAD
ILLINOIS

184-004627

RUBEN L. ANASTACIO & ASSOCIATES, LTD.
architects
4256 N. ARLINGTON HTS. RD.
SUITE # 203
ARLINGTON HTS., IL. 60004
TEL (847) 398-7254
CELL 847-812-1558

COPYRIGHT-2020

REVISIONS

JOB NO. 1120A
DATE: 11/11/20
DRAWN BY R.L.A.
APPROVED BY R.L.A.
SHEET NO.

A-6

OF ELEVEN

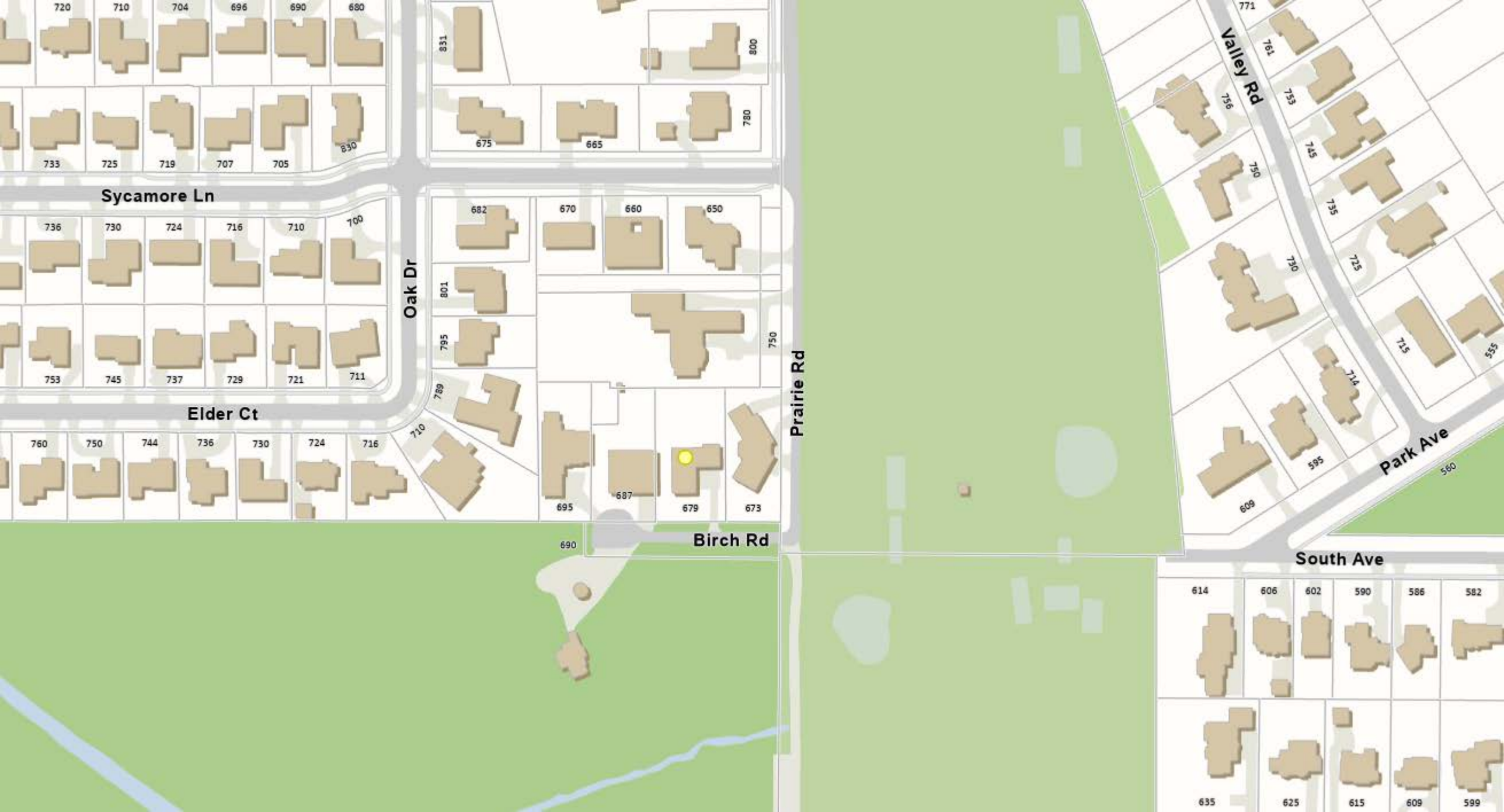
Sycamore Ln
Elder Ct
Oak Dr
Prairie Rd
Birch Rd
Valley Rd
Park Ave
South Ave
720
710
704
696
690
680
831
800
780
675
665
830
733
725
719
707
705
736
730
724
716
710
700
682
670
660
650
801
795
750
753
745
737
729
721
711
789
710
760
750
744
736
730
724
716
695
687
679
673
690
771
761
756
753
745
750
735
730
725
715
555
714
595
609
580
614
606
602
590
586
582
635
625
615
609
599

675 Village Court, Glencoe, Illinois 60022
p: (847) 835-4111 | info@villageofglencoe.org | Follow Us: @VGlencoe
www.villageofglencoe.org

Zoning Board of Appeals (ZBA) Application

Section A: Application Information

Check all that apply:

- [x] Request for variation(s) from the zoning code
- [ ] Appeal of an order, determination, or decision made by Village staff based on the zoning code

Subject property address: 252 Walden Drive

Applicant name: Omar Gutiérrez, NCARB Applicant phone: 847-903-4067

Applicant email: omar@ogutierrez.com

Owner name (if different from applicant): Michael Friedman

Owner phone: 847-269-3664 Owner email: mfriedman15@gmail.com

Brief description of project:

Build a new covered screened porch over an exiting stone patio in the side yard as well as a new outdoor kitchen, stone patio and walk.

Variation request(s):

1. Encroach 8.34' into minimum required front yard setback to add a screened porch
2. Exceed maximum allowed floor area by 275.94 sf to add a screened porch

675 Village Court, Glencoe, Illinois 60022
p: (847) 835-4111 | info@villageofglencoe.org | Follow Us: @VGlencoe

Section B: Standards for Variations

For applications for variations, provide a brief response to the following prompts. Use this form or attach a separate letter to this application. The full text of the standards for the approval of variations can be found in Sec. 7-403(e) of the zoning code.

1. Why are the requested variations necessary? What hardship or practical difficulty would result if they are not approved? Include a description of any exceptional physical characteristics of the property (for example, unusual size, shape, topography, existing uses or structures, etc.), if applicable.

In a time when staying home and access to open air is an imperative, diverse and comfortable spaces are a necessity. The proposed addition builds over an existing stone patio to create a covered porch along the side yard of the home, a feature that is common in many homes in the village.

The unusual curved shaped of the lot makes for an oddly shaped buildable area. The strict enforcement of the maximum building size requirement for the property would make any addition impossible since the size of the home is bigger than what the zoning requirements allow, even though the home complied with this requirement at the time of construction. Granting the front setback variation would allow for geometry that is in harmony with the existing home while adding a covered porch over a preexisting patio.

Special care has been taken to ensure that the proposed improvements do not adversely affect the character of the property or the neighborhood.

675 Village Court, Glencoe, Illinois 60022
p: (847) 835-4111 | info@villageofglencoe.org | Follow Us: @VGlencoe

2. Describe how the proposed variations would result in a development that is not detrimental to adjacent or nearby properties or the public good.

The details and materials of the proposed addition match the existing home.

The proposed porch orientation and its roof configuration continue the visual language established by the existing roof above the covered entry.

The location of the proposed porch does not limit acces to light or views to adjacent properties. In fact, it may not even be visible from the street due to existing vegetation.

3. Describe any efforts the applicant has made to solicit feedback on the proposed variations from neighboring or nearby property owners or residents. What was the result of these efforts?

We are in the process of contacting our neighbors for approval and will provide the approval at the zoning board meeting.

Section C: Petition for Appeal

Provide a separate letter describing the order, determination, procedures, or failure to act being appealed. Applicants only applying for variations from the zoning code do not need to provide this letter.

675 Village Court, Glencoe, Illinois 60022
p: (847) 835-4111 | info@villageofglencoe.org | Follow Us: @VGlencoe

Section D: Acknowledgement and Signature

☑ *I hereby acknowledge that all information provided in this application is true and correct.*

Applicant's signature _____ Date 03/11/2021

Owner's signature (if different than applicant) _____ Date _____

VILLAGE OF GLENCOE
MEMORANDUM
675 Village Court, Glencoe, Illinois 60022
p: (847) 835-4111 | info@villageofglencoe.org | Follow Us: @VGlencoe
www.villageofglencoe.org

Zoning Board of Appeals Memorandum

DATE: April 5, 2021

TO: Zoning Board of Appeals

FROM: Taylor Baxter, AICP, Development Services Manager
Rich McGowan, Planner

SUBJECT: Consideration of variations to allow a screened porch addition to an existing single-family residence to encroach into the front yard setback and to exceed the maximum allowable gross floor area at 252 Walden Drive

---

Background: The applicants are requesting two variations from the Zoning Code to allow to allow a screened porch addition to an existing single-family residence to encroach into the front yard setback and to exceed the maximum allowable gross floor area. The subject property is in the RA Single-family Residential Zoning District.

The requested variations are from the following standard in the Zoning Code:

1. *Section 3-111(C)(1) – To reduce the required front yard setback from 41.68 feet to 33.34 feet, a variation of 20%*
2. *Section 3-111(E) – To increase the allowable gross floor area from 4,171.78 to 4,425.94 square feet, a variation of 6.1%.*

Variation	Existing	Required/Allowed	Proposed	Variation %	Max. Allowable Variation %
Front setback	40.42 ft	41.68 ft	33.34 ft	20%	20%
Gross floor area	4,188.85 sq ft	4,171.78 sq ft	4,425.94 sq ft	6.1%	15%

Analysis: The Zoning Code includes the following standards for the consideration of variation requests:

1.) *General Standard. No variation shall be granted pursuant to this Section unless the applicant shall establish that carrying out the strict letter of the provisions of this Code would create a particular hardship or a practical difficulty. Such a showing shall require proof that the variation being sought satisfies each of the standards set forth in this subsection.*

The applicants have stated the shape of the lot and the size of the existing house make the construction of a screened porch impossible without the approval of variations.

2.) *Unique Physical Condition. The subject property is exceptional as compared to other lots subject to the same provision by reason of a unique physical condition, including presence of an existing use, structure, or sign, whether conforming or nonconforming; irregular or substandard shape or size; exceptional topographical features; or other extraordinary physical conditions peculiar to and inherent in the subject property that amount to more than a mere inconvenience to the owner and that relate to or arise out of the lot rather than the personal situation of the current owner of the lot.*

The lot is unusually shaped and is located along a curve of Walden Drive. The required front setback is established by the existing setbacks on the subject property, on 258 Walden (which is significantly deeper than the subject property), and the side setback at 242 Walden. There is not a uniform front setback along this curving block frontage.

The 13,413-square-foot subject property is also significantly undersized for the RA district, which has a minimum lot size of 20,000 square feet.

3.) *Not Self-Created. The aforesaid unique physical condition is not the result of any action or inaction of the owner, or of the owner's predecessors in title and known to the owner prior to acquisition of the subject property, and existed at the time of the enactment of the provisions from which a variation is sought or was created by natural forces or was the result of governmental action, other than the adoption of this Code, for which no compensation was paid.*

The unusual size and shape of the lot, along with the lack of uniformity in setbacks along the block frontage, are not the result of any action by the property owner.

4.) *Not Merely Special Condition. The alleged hardship or difficulty is not merely the inability of the owner or occupant to enjoy some special privilege or additional right not available to owners or occupants of other lots subject to the same provision, nor merely an inability to make more money from the use of the subject property; provided, however, that where the standards herein set out exist, the existence of an economic hardship shall not be a prerequisite to the grant of an authorized variation.*

The purpose of the variation request is not based exclusively on a desire to make more money from the property. The unusual shape of the lot presents a hardship related to setback requirements. While lot is significantly undersized for the zoning district, there are other similarly sized lots in the RA district in the Village.

5.) *Code and Plan Purposes. The variation would not result in a use or development of the subject property that would be not in harmony with the general and specific purposes for which this Code and the provision from which a variation is sought were enacted.*

The proposed encroachment would not result in a development likely to be significantly out of harmony with the purpose of the code. The proposed front setback variation would not result in a departure from an established, uniform setback along a block frontage. The addition of a screened porch would not significantly add to the visible bulk of the existing house.

6.) Essential Character of the Area. The variation would not result in a use or development on the subject property that:

(a) Would be materially detrimental to the public welfare or materially injurious to the enjoyment, use, development, or value of property or improvements permitted in the vicinity; or
(b) Would materially impair an adequate supply of light and air to the properties and improvements in the vicinity; or
(c) Would substantially increase congestion in the public streets due to traffic or parking; or
(d) Would unduly increase the danger of flood or fire; or
(e) Would unduly tax public utilities and facilities in the area; or
(f) Would endanger the public health or safety.

The proposed variations would not be detrimental to the essential character of the area. There is no established, uniform setback along the curving block face of the subject property. Likewise, the property is undersized for its district and the proposed screened porch would be unlikely to have a negative impact on the public welfare or the value of nearby properties.

This variation request received printed public notice at least 15 days prior to the public hearing. Additionally, owners of properties within 200 feet of the subject property were notified.

Recommendation: Based on the materials presented and the public hearing, it is the recommendation of staff that the variation requests of be accepted or denied.

Motion: The Zoning Board of Appeals may make a motion as follows:

Move to accept/deny the request for a variations to reduce the required front setback and increase the allowable gross floor area for a new screened porch addition to an existing single-family residence at 252 Walden Drive.

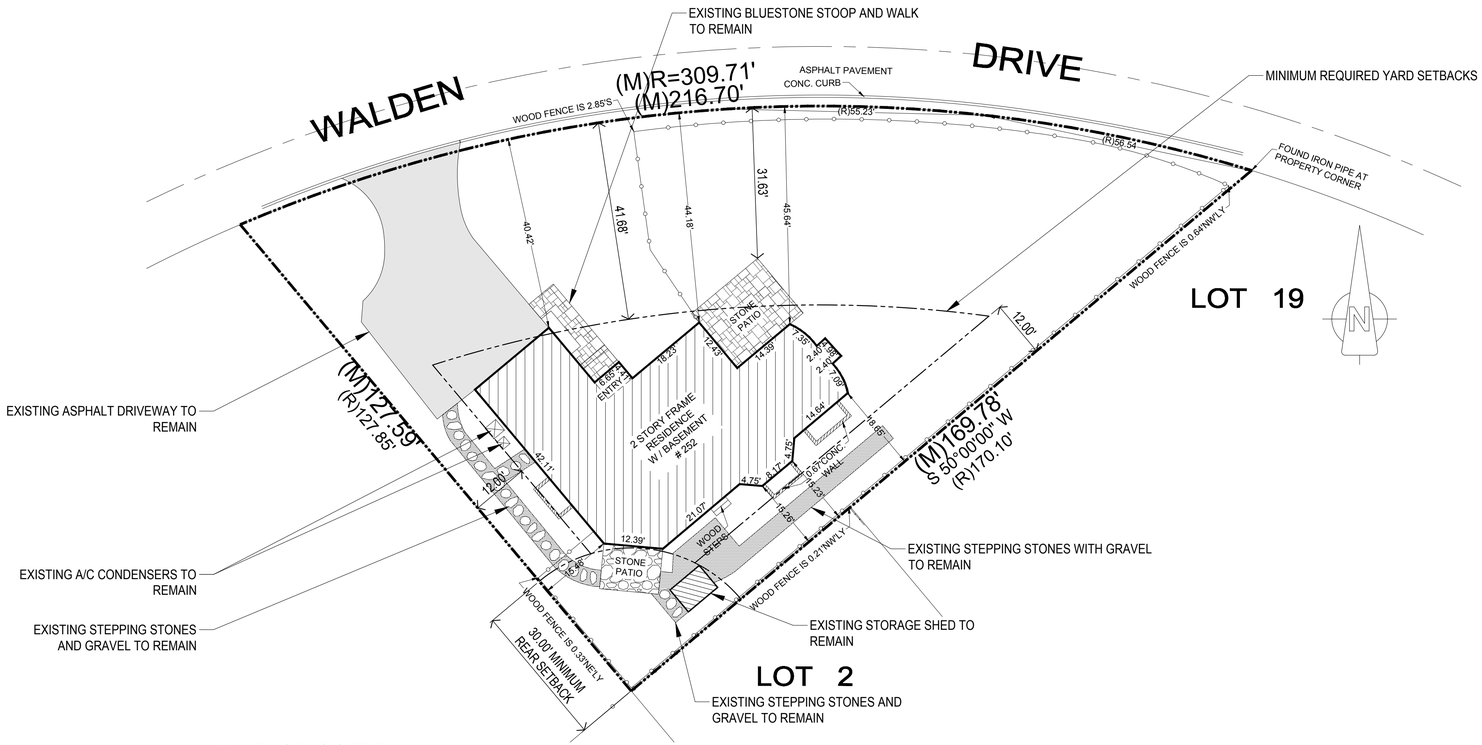

1 EXISTING SITE PLAN

SCALE: 1" = 15'-0"

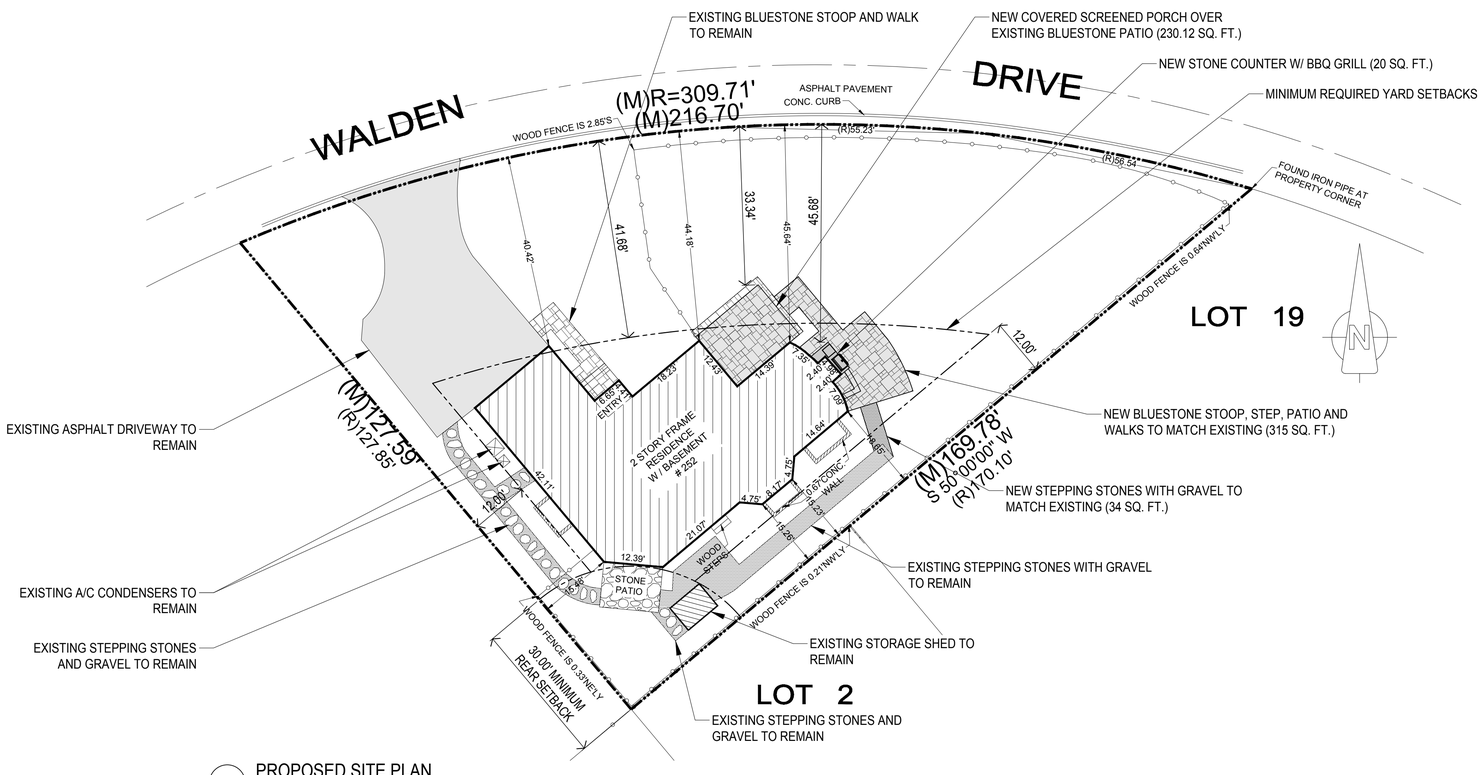

2 PROPOSED SITE PLAN

SCALE: 1" = 15'-0"

DRAWING INDEX

SHEET	CONTENTS
A1	SCOPE OF WORK, GENERAL NOTES, SITE PLANS
A2	EXISTING FLOOR PLAN
A3	PROPOSED FLOOR PLAN
A4	EXTERIOR ELEVATIONS
A5	EXTERIOR ELEVATIONS

SCOPE OF WORK

NEW COVERED SCREENED PORCH OVER EXISTING STONE PATIO, NEW OUTDOOR KITCHEN AND STONE WALKS

GENERAL NOTES

GENERAL

ALL CONSTRUCTION SHALL ADHERE TO THE FOLLOWING CODES: 2015 INTERNATIONAL CODE COUNCIL (ICC) FOR BUILDING, RESIDENTIAL, MECHANICAL, PLUMBING AND FIRE CODES, 2014 NFPA ELECTRIC CODE, 2015 ILLINOIS ENERGY CONSERVATION CODE, ILLINOIS STATE PLUMBING CODE AND ALL AMENDMENTS TO ADOPTED CODES BY THE VILLAGE OF GLENCOE

ALL CONTRACTORS SHALL COORDINATE WITH ALL OTHER CONTRACTORS PRIOR TO AND DURING CONSTRUCTION

DO NOT SCALE DRAWINGS; USE DIMENSIONS IN DRAWINGS OR CONTACT ARCHITECT FOR CLARIFICATIONS

ALL MATERIALS, EQUIPMENT, STRUCTURAL ELEMENTS, FINISHES, WINDOWS, DOORS, ETC., WHETHER PRE-MANUFACTURED OR SITE BUILT SHALL BE INSTALLED PER THE MANUFACTURER'S INSTRUCTIONS AND SPECIFICATIONS

ALL DRAWINGS APPROVED BY THE LOCAL MUNICIPALITY SHALL BE KEPT ON THE BUILDING SITE AT THE TIME OF INSPECTIONS

THE ARCHITECT

SHOULD ANY DISCREPANCIES, ERRORS, OMISSIONS OR CONFLICT OF ITEMS NEEDING CLARIFICATION BE DISCOVERED IN THE PLANS AND/OR SPECIFICATIONS, THE ARCHITECT SHALL BE PROMPTLY NOTIFIED IN WRITING BEFORE SUBMITTING BID AND/OR PROCEEDING WITH WORK SO THAT HE MAY HAVE THE OPPORTUNITY TO RESOLVE THEM. FAILURE TO PROMPTLY NOTIFY THE ARCHITECT OF SUCH CONDITIONS SHALL ABSOLVE THE ARCHITECT FROM ANY RESPONSIBILITY OF SUCH FAILURE

MATERIALS & INSTALLATION

ALL WORK TO CONFORM TO THE CODES OF THE LOCAL MUNICIPALITY AND ALL OTHER PERTINENT SAFETY CODES AND RULES OF OTHER APPLICABLE GOVERNING BODIES. IF AN INSPECTION AUTHORITY FINDS FAULT WITH ANY SUB-CONTRACTOR WORK, THAT SUB-CONTRACTOR SHALL CORRECT SUCH WORK TO THE SATISFACTION OF THE INSPECTING AUTHORITY AT NO EXPENSE TO THE OWNER OR ARCHITECT

ALL SUB-CONTRACTORS TO EXAMINE SITE & EXISTING CONDITIONS AS A BASIS FOR BIDDING. FAILURE TO DETERMINE EXISTING CONDITIONS OR NATURE OF DEMOLITION AND/OR CONSTRUCTION WILL NOT BE CONSIDERED AS A BASIS FOR ADDITIONAL COMPENSATION

SUB-CONTRACTORS SHALL FURNISH ALL MATERIAL & EQUIPMENT NECESSARY FOR A COMPLETE AND READY TO OPERATE SYSTEM. ANY MATERIALS OR EQUIPMENT NOT SHOWN ON DRAWINGS BUT REQUIRED FOR A SATISFACTORY OPERATION SYSTEM SHALL BE FURNISHED & INSTALLED AS THOUGH COMPLETELY SPECIFIED. INSTALLATION TO BE DONE IN ACCORDANCE WITH THE MANUFACTURER'S WRITTEN INSTRUCTIONS

CONCRETE WORK

ALL CONCRETE WORK SHALL CONFORM TO ACI 318 OF THE AMERICAN CONCRETE INSTITUTE FOR UNREINFORCED CONCRETE

ALL CONCRETE WORK SHALL DEVELOP A COMPRESSIVE STRENGTH OF 3000 PSI IN 28 DAYS

ALL CONCRETE WORK SHALL COMPLY TO THE ACI STANDARDS FOR HOT AND COLD WEATHER CONCRETING

ALL CONCRETE FOUNDATIONS SHALL EXTEND A MINIMUM OF 3'-6" BELOW GRADE

CARPENTRY NOTES

ALL LOAD BEARING HEADERS SHALL BE (2) 2 X 12 WITH 1/2" PLYWOOD SPACER UNLESS OTHERWISE NOTED. INSTALL DOUBLE CRIPPLES EACH SIDE FOR ALL SPANS OVER 6'-0"

PROVIDE CONCEALED GALVANIZED OR ALUMINUM SHEET METAL FLASHING AT ALL WALL/ROOF JUNCTIONS AND AS REQUIRED FOR WATERPROOF CONSTRUCTION

ALL STAIRS SHALL HAVE A MINIMUM TREAD DEPTH OF 10" MEASURED NOSING; ALL STAIRS SHALL HAVE A MAXIMUM STEP RISER HEIGHT OF 7-3/4" AND THE MAXIMUM DIFFERENCE BETWEEN THE TALLEST AND THE SMALLEST RISER SHALL NOT BE GREATER THAN 3/8"

ALL STAIRS WITH FOUR OR MORE RISERS SHALL HAVE CONTINUOUS, GRASPABLE HANDRAIL INSTALLED ON AT LEAST ONE SIDE OF THE STAIRWAY. THE HANDRAIL SHALL HAVE BOTH ENDS RETURNED TO THE WALL OR NEWEL POST

CUTS, NOTCHES AND HOLES BORED IN TRUSSES, LAMINATED VENEER LUMBER, GLUE-LAMINATED MEMBERS OR I-JOISTS ARE NOT PERMITTED UNLESS THE EFFECTS OF SUCH ARE SPECIFICALLY ADDRESSED BY R502.8.2

DOORS AND WINDOWS

ALL EXTERIOR GLASS DOORS AND WINDOWS SHALL BE IN COMPLIANCE WITH SECTION R 613 FOR TESTING, LABELING AND PERFORMANCE

MAXIMUM GLAZING U FACTOR FOR ALL EXTERIOR DOORS AND WINDOWS SHALL NOT BE GREATER THAN 0.32 - MAXIMUM GLAZING U FACTOR FOR ALL SKYLIGHTS SHALL NOT BE GREATER THAN 0.55 PER R402.1.2

AT FINAL INSPECTION LABELS ON ALL WINDOWS AND DOORS SHALL DEMONSTRATE COMPLIANCE WITH SECTION 601.3.2.2

ELECTRICAL

ALL POWER WIRING SHALL BE IN METAL CONDUIT UNLESS OTHERWISE NOTED

THE ELECTRICAL CIRCUITS AND PANEL LAYOUT ARE TO BE DESIGNED BY THE ELECTRICAL CONTRACTOR IN ACCORDANCE WITH ALL APPLICABLE CODES

AT LEAST 75% OF THE LAMPS IN THE PERMANENTLY INSTALLED LIGHT FIXTURES MUST BE HIGH EFFICIENCY BULBS PER R404.1

ALL EXTERIOR ELECTRICAL OUTLETS SHALL BE GFCI PROTECTED

ZONING DATA				
		Existing		Notes
Zoning district		R-A		Single Family Dwelling District
Lot dimensions (ft.)				Irregularly shaped lot
Lot area (sq. ft.)		13,413.00		Per Village of Glencoe records
Average lot width		79.00		Lot area / greatest lot depth of 169.78'
Total ground coverage				
	Maximum	Existing	Proposed	Notes
30% of lot area	4,023.90	2,144.47		New covered screened porch proposed
C-Value Calculation				
	Maximum	Existing	Proposed	Notes
	0.65	0.63	0.64	Imp. surfaces weighted @ 0.95, pervious surfaces weighted @ 0.50 coefficient
Accessory building coverage requirements (Sq. Ft.)				
	Maximum	Existing	Proposed	Notes
6% of lot area maximum	804.78	48.00	0.00	
Yard Requirements (Ft.)				
	Minimum	Existing	Proposed	Notes
Front	41.68	40.42	33.34	New covered screened porch proposed - VARIANCE REQUEST
South-west side	12.00	15.48	15.48	25% of average lot width, min. 12' - no change proposed
South-east side	12.00	15.23	15.23	25% of average lot width, min. 12' - no change proposed
Rear setback	30.00	30.26	30.26	No change proposed
Height Requirements (Ft.)				
	Maximum	Existing	Proposed	Notes
Principal Structure	31.00	34.00	34.00	No change proposed
Accessory Structure	18.00	8.33	0.00	No change proposed
Floor Area Ratio (F.A.R.) Requirements				
	Maximum	Existing	Proposed	Notes
	4,150.00	4,329.95	4,425.94	New covered screened porch proposed - VARIANCE REQUEST

MUNICIPALITY APPROVAL

THE FRIEDMAN / ROIN RESIDENCE

252 WALDEN DR.
GLENCOE, IL 60022

THESE DRAWINGS CONTAIN PROPRIETARY INFORMATION. ANY REPRODUCTION OR REUSE MUST BE BY CONSENT OF OMAR GUTIERREZ, ARCHITECT
© 2021 - OMAR GUTIERREZ, ARCHITECT

ISSUED FOR:	DATE
OWNER REVIEW	10-10-2020
OWNER REVIEW	11-09-2020
OWNER REVIEW	01-29-2021
ZBA APPEAL	02-04-2021
ZBA APPEAL	03-06-2021
ZBA APPEAL	03-11-2021

PROFESSIONAL STAMP

LICENSED ARCHITECT
OMAR G. GUTIERREZ
001.022638
STATE OF ILLINOIS

LICENSE EXPIRES 11/30/2022

Omar Gutiérrez, NCARB
a r c h i t e c t

1209 MONROE ST.
EVANSTON, IL 60202
PH: 847.903.4067

PROJECT #	252-20
DRAWN BY:	OGG

A1

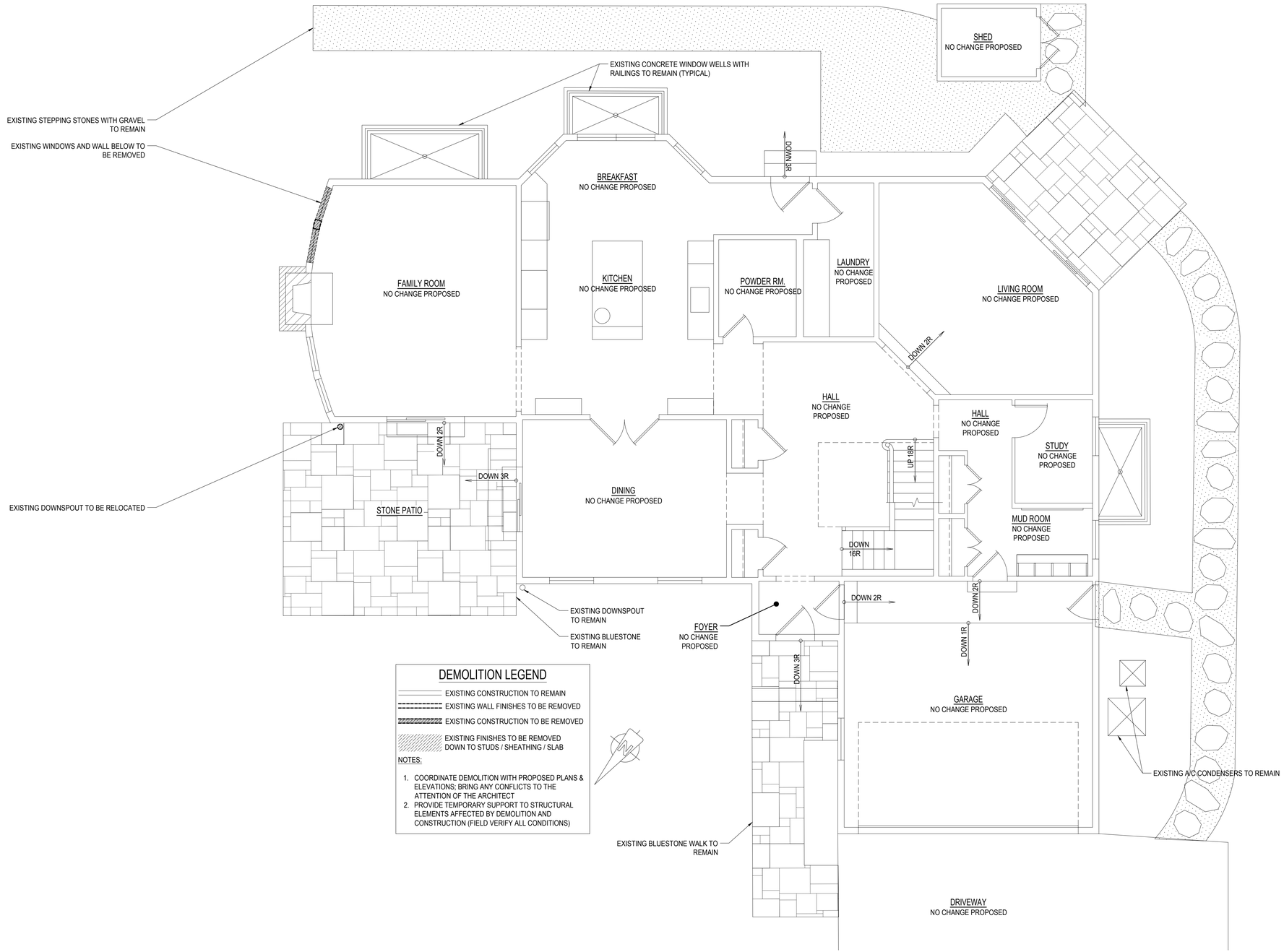

DEMOLITION LEGEND

- EXISTING CONSTRUCTION TO REMAIN
- EXISTING WALL FINISHES TO BE REMOVED
- EXISTING CONSTRUCTION TO BE REMOVED
- EXISTING FINISHES TO BE REMOVED DOWN TO STUDS / SHEATHING / SLAB

NOTES:

1. COORDINATE DEMOLITION WITH PROPOSED PLANS & ELEVATIONS; BRING ANY CONFLICTS TO THE ATTENTION OF THE ARCHITECT
2. PROVIDE TEMPORARY SUPPORT TO STRUCTURAL ELEMENTS AFFECTED BY DEMOLITION AND CONSTRUCTION (FIELD VERIFY ALL CONDITIONS)

1 EXISTING FIRST FLOOR DEMOLITION PLAN

SCALE: 1/4" = 1'-0"

MUNICIPALITY APPROVAL

THE FRIEDMAN / ROIN RESIDENCE

252 WALDEN DR.
GLENCOE, IL 60022

THESE DRAWINGS CONTAIN PROPRIETARY INFORMATION. ANY REPRODUCTION OR REUSE MUST BE BY CONSENT OF OMAR GUTIERREZ, ARCHITECT
© 2021 - OMAR GUTIERREZ, ARCHITECT

ISSUED FOR:	DATE
OWNER REVIEW	10-10-2020
OWNER REVIEW	11-09-2020
OWNER REVIEW	01-29-2021
ZBA APPEAL	02-04-2021
ZBA APPEAL	03-06-2021
ZBA APPEAL	03-11-2021

PROFESSIONAL STAMP

LICENSED ARCHITECT
OMAR G. GUTIERREZ
001.022638
STATE OF ILLINOIS

LICENSE EXPIRES 11/30/2022

Omar Gutiérrez, NCARB
architect

1209 MONROE ST.
EVANSTON, IL 60202
PH: 847.903.4067

PROJECT #	252-20
DRAWN BY:	OGG

A2

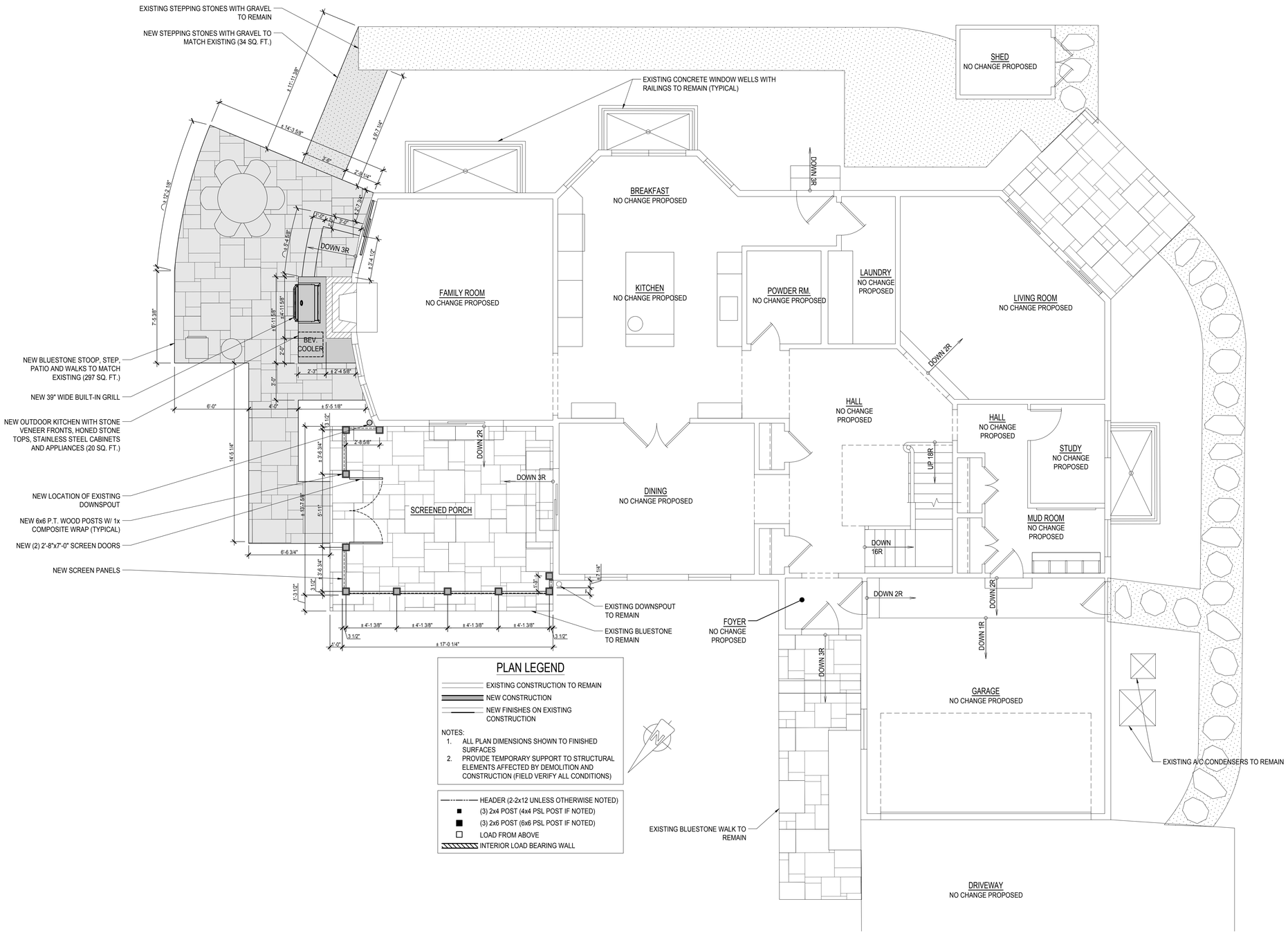

1 NEW FIRST FLOOR PLAN
SCALE: 1/4" = 1'-0"

MUNICIPALITY APPROVAL

THE FRIEDMAN / ROIN RESIDENCE

252 WALDEN DR.
GLENCOE, IL 60022

THESE DRAWINGS CONTAIN PROPRIETARY INFORMATION. ANY REPRODUCTION OR REUSE MUST BE BY CONSENT OF OMAR GUTIERREZ, ARCHITECT
© 2021 - OMAR GUTIERREZ, ARCHITECT

ISSUED FOR:	DATE
OWNER REVIEW	10-10-2020
OWNER REVIEW	11-09-2020
OWNER REVIEW	01-29-2021
ZBA APPEAL	02-04-2021
ZBA APPEAL	03-06-2021
ZBA APPEAL	03-11-2021

PROFESSIONAL STAMP

LICENSED ARCHITECT
OMAR G. GUTIERREZ
001.022638
STATE OF ILLINOIS

LICENSE EXPIRES 11/30/2022

Omar Gutiérrez, NCARB
a r c h i t e c t

1209 MONROE ST.
EVANSTON, IL 60202
PH: 847.903.4067

PROJECT #	252-20
DRAWN BY:	OGG

A3

1 FRONT ELEVATION
SCALE: 1/4" = 1'-0"

MUNICIPALITY APPROVAL

THE FRIEDMAN / ROIN RESIDENCE

252 WALDEN DR.
GLENCOE, IL 60022

THESE DRAWINGS CONTAIN PROPRIETARY INFORMATION. ANY REPRODUCTION OR REUSE MUST BE BY CONSENT OF OMAR GUTIERREZ, ARCHITECT
© 2021 - OMAR GUTIERREZ, ARCHITECT

ISSUED FOR:	DATE
OWNER REVIEW	10-10-2020
OWNER REVIEW	11-09-2020
OWNER REVIEW	01-29-2021
ZBA APPEAL	02-04-2021
ZBA APPEAL	03-06-2021
ZBA APPEAL	03-11-2021

PROFESSIONAL STAMP

LICENSED ARCHITECT
OMAR G. GUTIERREZ
001.022638
STATE OF ILLINOIS

LICENSE EXPIRES 11/30/2022

Omar Gutiérrez, NCARB
a r c h i t e c t

1209 MONROE ST.
EVANSTON, IL 60202
PH: 847.903.4067

PROJECT #	252-20
DRAWN BY:	OGG

A4

1 LEFT SIDE ELEVATION

SCALE: 1/4" = 1'-0"

MUNICIPALITY APPROVAL

THE FRIEDMAN / ROIN RESIDENCE

252 WALDEN DR.
GLENCOE, IL 60022

THESE DRAWINGS CONTAIN PROPRIETARY INFORMATION. ANY REPRODUCTION OR REUSE MUST BE BY CONSENT OF OMAR GUTIERREZ, ARCHITECT
© 2021 - OMAR GUTIERREZ, ARCHITECT

ISSUED FOR:	DATE
OWNER REVIEW	10-10-2020
OWNER REVIEW	11-09-2020
OWNER REVIEW	01-29-2021
ZBA APPEAL	02-04-2021
ZBA APPEAL	03-06-2021
ZBA APPEAL	03-11-2021

PROFESSIONAL STAMP

LICENSED ARCHITECT
OMAR G. GUTIERREZ
001.022638
STATE OF ILLINOIS

LICENSE EXPIRES 11/30/2022

Omar Gutiérrez, NCARB
a r c h i t e c t

1209 MONROE ST.
EVANSTON, IL 60202
PH: 847.903.4067

PROJECT #	252-20
DRAWN BY:	OGG

A5

VILLAGE OF GLENCOE
PUBLIC WORKS DEPARTMENT
675 Village Court, Glencoe, Illinois 60022
p: (847) 835-4111 | publicworks@villageofglencoe.org | Follow Us: @VGlencoe

Last Updated: November 11, 2019

Floor Area Ratio Packet – F A R

Dear Homeowner, Architect, and Contractor:

The attached materials will help you to submit a complete building permit package for permit review.

The explanatory attachments are intended only as aids to understanding the Glencoe Zoning Code. Additional explanation and answers to particular questions can be obtained either from the Building & Zoning Division staff or from the Zoning Code itself.

PLEASE NOTE: As of June 1, 2019, basements are included in permit fees for new construction. The term "basement area", when used in the Comprehensive Fee and Fine Schedule, shall mean those portions of a basement consisting of habitable space (as defined by the International Building Code as adopted pursuant to Section 9-18 of the Village Code), and related bathrooms, toilets, closets, halls, and storage areas, but shall not include areas of a basement such as utility spaces and similar areas in which the walls and ceiling are not finished with drywall or similar building material.

Please review the attached materials and if you have any questions contact Building & Zoning at 847-835-4111.

Floor Area Ratio Calculations | **Summary** | Page 1			
1	Address: 252 Walden Dr.		
2	Drawing and calculations to determine lot area: Lot area given per Village of Glencoe records		
3	Lot Area Total Sq. Ft.:	13,413.00 Sq. Ft.	
4	Proposed First Floor Total:		2431.42 Sq. Ft.
5	Proposed Second Floor Total:		2151.27 Sq. Ft.
6	Proposed Third Floor Total:		0.00 Sq. Ft.
7	Proposed Third Floor, Attic, and Basement Total:		187.44 Sq. Ft.
8	Subtotal (Add Lines 4 through 7):		4770.13 Sq. Ft.
9	Total Exclusions (From Exclusion Calculation Form):		344.19 Sq. Ft.
10	**Total Proposed Sq. Ft.** (Subtract Line 9 from Line):		4425.94 Sq. Ft.
11	**Total Allowed Sq. Ft.** (Apply correct formula from Table A to Lot Area from Line 3):		4150.00 Sq. Ft.
12	If Line 11 exceeds Line 10 the plans comply with FAR requirements		Yes ○ No ●

Prepared By:

Architect Printed Name, Signature, & Stamp Omar Gutiérrez, NCARB

Staff Contact Name Omar Gutiérrez, NCARB

Telephone Number 847-903-4067

Checked By:

Development Services Manager

Date

Walden Dr
Old Green Bay Rd
Green Bay Rd
Glencoe Dr
Crescent Dr
265
261
253
249
243
241
237
85
85
93
101
252
258
242
100
90
70
63
64
57
51
36
43

675 Village Court, Glencoe, Illinois 60022
p: (847) 835-4111 | info@villageofglencoe.org | Follow Us: @VGlencoe
www.villageofglencoe.org

Zoning Board of Appeals (ZBA) Application

Section A: Application Information

Check all that apply:

- [x] Request for variation(s) from the zoning code
- [ ] Appeal of an order, determination, or decision made by Village staff based on the zoning code

Subject property address: 485 Jefferson

Applicant name: Phil Gerber Applicant phone: 8479777400

Applicant email: phil.gerber@gmail.com

Owner name (if different from applicant):

Owner phone: 8479777400 Owner email: phil.gerber@gmail.com

Brief description of project:

Place 2 a.c.units side-by-side on east side of house.

Variation request(s):

The east elevation of the house is 11'6" from the east property line. The units can be place 6" from house and are 31" deep. This leaves 8'5" from the east face of the unit to the property line.

I hereby request a 20% variance from the 10' required setback to allow space for the 2 a.c. units.
The resulting 8' gives us a 5" leeway in placement of the units.

Link to brochure iS:
https://s7d2.scene7.com/is/content/AlliedAirEnterprises/1%20-%20Document%20Updates/FLAGSHIP_AIRCONDITIONERS_4SCU16LS_SPECSHEET.pdf

675 Village Court, Glencoe, Illinois 60022
p: (847) 835-4111 | info@villageofglencoe.org | Follow Us: @VGlencoe

Section B: Standards for Variations

For applications for variations, provide a brief response to the following prompts. Use this form or attach a separate letter to this application. The full text of the standards for the approval of variations can be found in Sec. 7-403(e) of the zoning code.

1. Why are the requested variations necessary? What hardship or practical difficulty would result if they are not approved? Include a description of any exceptional physical characteristics of the property (for example, unusual size, shape, topography, existing uses or structures, etc.), if applicable.

This new construction residence is 65' in depth. Placement according to current zoning would have to be in back of the house. These long runs of refrigerant lines would result in in effecient and perhaps inadequate preformance of the condensers.

In addition, placement in the back of the house would be in back patio location, which is unacceptable for sound and aesthetic reasons.

Note the neighbor of the house to the east has sign off and approved the new location per attached.

675 Village Court, Glencoe, Illinois 60022
p: (847) 835-4111 | info@villageofglencoe.org | Follow Us: @VGlencoe
www.villageofglencoe.org

Section D: Acknowledgement and Signature

☑ *I hereby acknowledge that all information provided in this application is true and correct.*

Applicant's signature _____ Date 2/23/21

Owner's signature (if different than applicant) _____ Date _____

3/2/2021

485 Jefferson Ave. Zoning Board of Appeals

Dear Village of Glencoe,

We have spoken directly with Maggie and Phillip Gerber and are in agreement of the new proposed location of the A.C. Units.

The new location will be directly across from our A.C. Units and in the most desired location to prevent noise to our bedroom (located in the back of the home).

We are in agreement of the proposed Variation Request.

Thank you,

Susan Sorano Fabio Sorano

Susan and Fabio Sorano

481 Jefferson Ave.

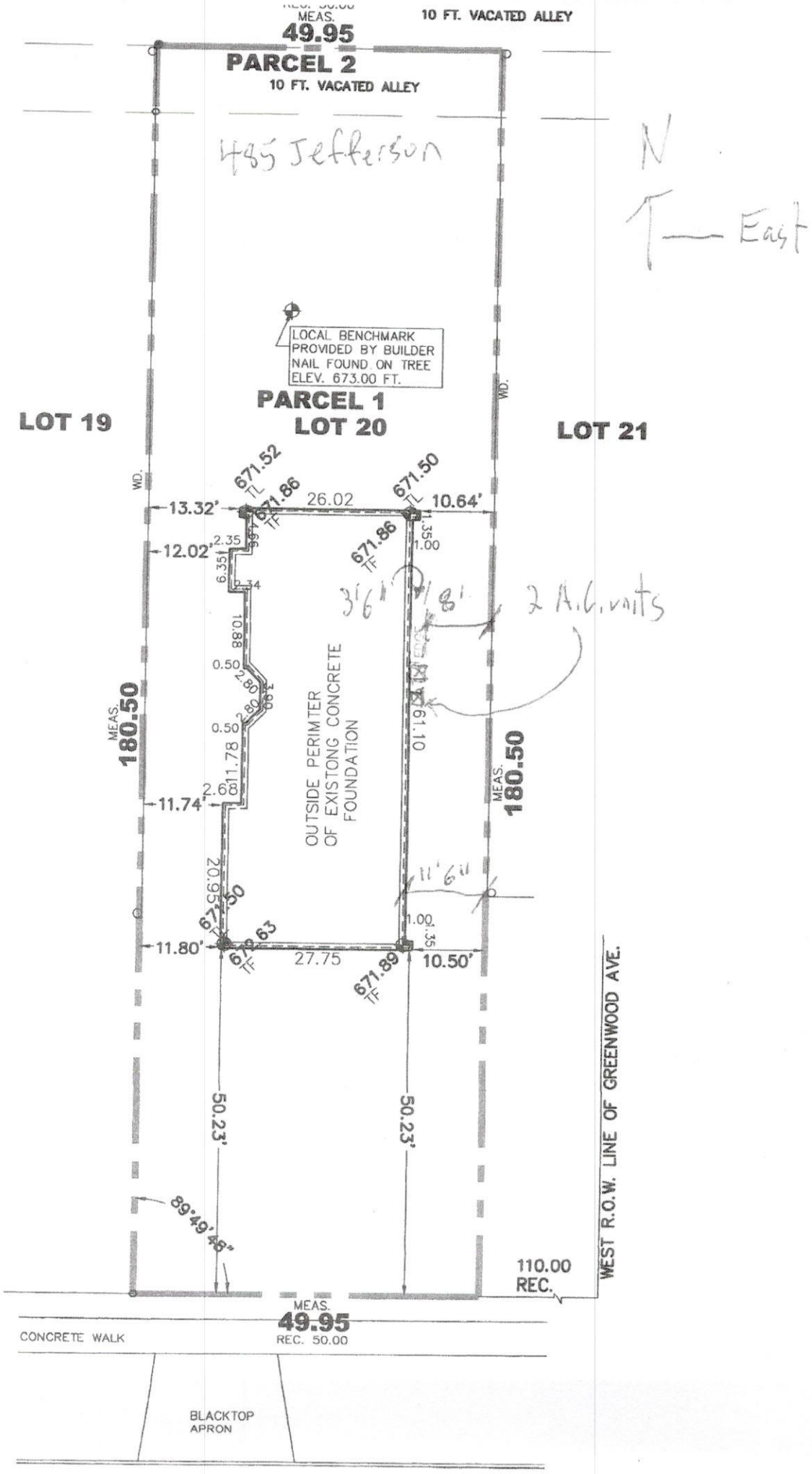
MEAS.
49.95
10 FT. VACATED ALLEY
PARCEL 2
10 FT. VACATED ALLEY
485 Jefferson
N
East
LOCAL BENCHMARK
PROVIDED BY BUILDER
NAIL FOUND ON TREE
ELEV. 673.00 FT.
PARCEL 1
LOT 20
LOT 19
LOT 21
WD.
671.52
TL
671.86
TF
26.02
671.50
TL
10.64'
13.32'
12.02'
2.35
6.35
2.34
10.88
0.50
2.80
1.90
2.80
0.50
11.78
2.6
11.74'
20.95
671.50
TF
671.63
TF
11.80'
27.75
671.89
TF
10.50'
1.35
1.00
671.86
TF
3'6"
1'8"
2 A.C. units
61.10
11'6"
1.00
1.35
OUTSIDE PERIMTER
OF EXISTONG CONCRETE
FOUNDATION
MEAS.
180.50
MEAS.
180.50
50.23'
50.23'
89°49'46"
110.00
REC.
WEST R.O.W. LINE OF GREENWOOD AVE.
MEAS.
49.95
REC. 50.00
CONCRETE WALK
BLACKTOP
APRON

ft.

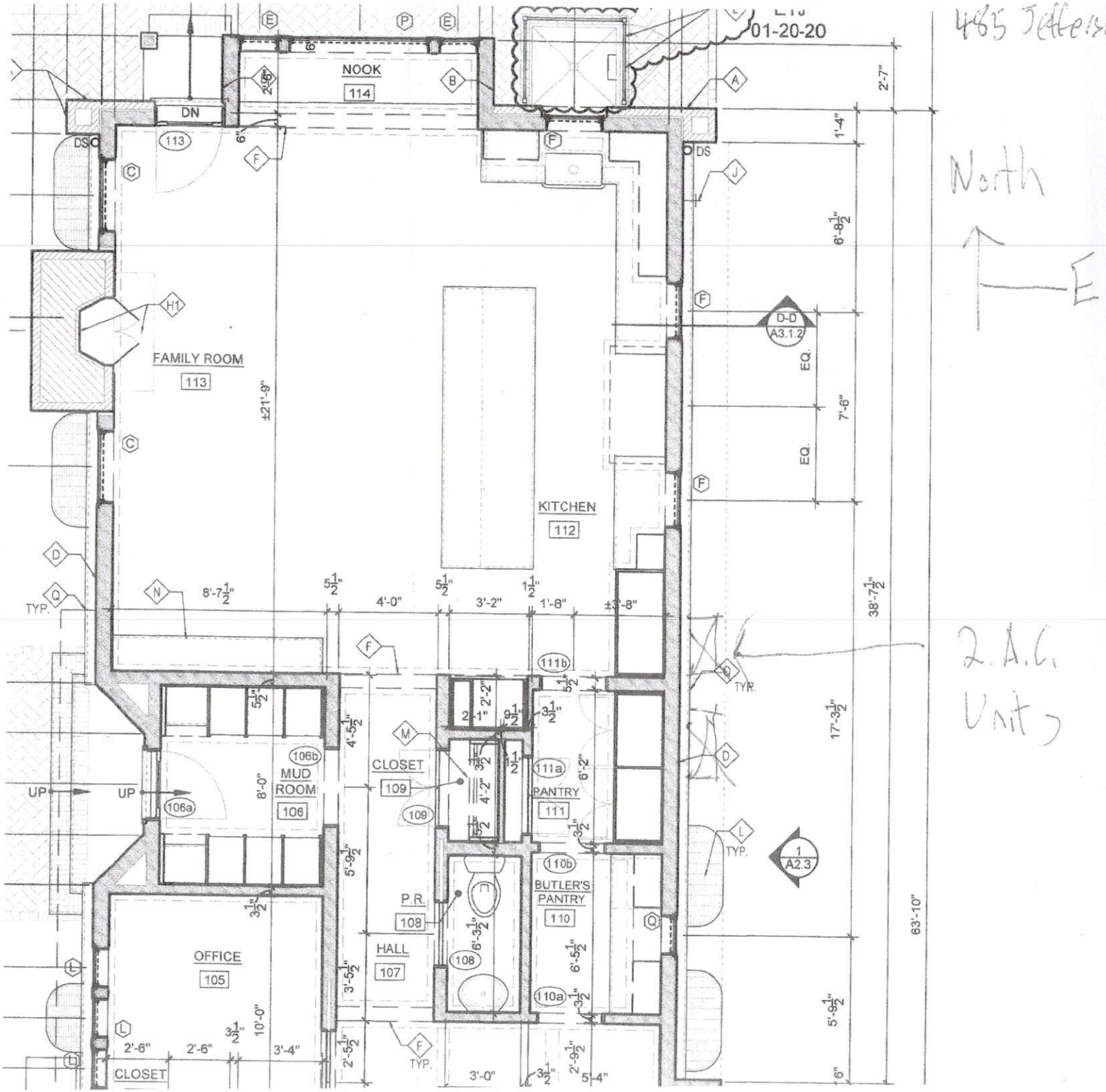
01-20-20
485 Jefferson
NOOK
114
DN
113
DS
FAMILY ROOM
113
KITCHEN
112
D-D
A3.1.2
EQ.
EQ.
TYP.
MUD ROOM
106
106a
106b
UP
UP
CLOSET
109
PANTRY
111
111a
111b
BUTLER'S PANTRY
110
110a
110b
P.R.
108
HALL
107
OFFICE
105
CLOSET
1
A2.3
TYP.
TYP.
TYP.
TYP.
±21'-9"
8'-7½"
4'-0"
3'-2"
1'-8"
±3'-8"
38'-7½"
63'-10"
17'-3½"
7'-6"
6'-8½"
2'-7"
1'-4"
8'-0"
10'-0"
2'-6"
2'-6"
3'-4"
3'-0"
5'-4"
North
E
2.A.C.
Units

VILLAGE OF GLENCOE
MEMORANDUM
675 Village Court, Glencoe, Illinois 60022
p: (847) 835-4111 | info@villageofglencoe.org | Follow Us: @VGlencoe
www.villageofglencoe.org

Zoning Board of Appeals Memorandum

DATE: March 29, 2021

TO: Zoning Board of Appeals

FROM: Taylor Baxter, AICP, Development Services Manager
Rich McGowan, Planner

SUBJECT: Consideration of a variation to allow for two accessory structures in the required side yard setback

---

Background: The applicant is requesting one variation from the Zoning Code to allow for the installation of two air conditioning units in the required side yard setback.

The subject property is in the R-B single-family Residential Zoning District. The requested variation is from the following standard in the Zoning Code:

1. Section 3-111(C) – To reduce the required side yard setback from 10 feet to 8 feet, a variation of 20%. The ZBA may grant front setback variations up to 20%.

	Existing	Required	Proposed	Variation %
Side Yard Setback (min.)	10.50 ft.	10 ft.	8.0 ft.	20%

The 9,050-square-foot subject property is undersized for the R-B district, which has a minimum lot size of 13,000 square feet in this area. At 49.95 feet in width, the lot does not meet the 80-foot minimum lot width for the district.

Analysis: The Zoning Code includes the following standards for the consideration of variation requests:

1.) *General Standard. No variation shall be granted pursuant to this Section unless the applicant shall establish that carrying out the strict letter of the provisions of this Code would create a particular hardship or a practical difficulty. Such a showing shall require proof that the variation being sought satisfies each of the standards set forth in this subsection.*

The applicant has stated that the variations are necessary to avoid installation in the rear yard to prevent long and costly installations of refrigerant lines, resulting in inefficient and potentially inadequate performance of the air conditioning condensers.

2.) *Unique Physical Condition. The subject property is exceptional as compared to other lots subject to the same provision by reason of a unique physical condition, including presence of an existing use, structure, or sign, whether conforming or nonconforming; irregular or substandard shape or size; exceptional topographical features; or other extraordinary physical conditions peculiar to and inherent in the subject property that amount to more than a mere inconvenience to the owner and that relate to or arise out of the lot rather than the personal situation of the current owner of the lot.*

The lot is undersized for the R-B zoning district and does not meet the minimum lot width or lot area standards. The non-conforming width of the lot constrains the applicant's ability to install or construct any accessory structures in the side yards.

3.) *Not Self-Created. The aforesaid unique physical condition is not the result of any action or inaction of the owner, or of the owner's predecessors in title and known to the owner prior to acquisition of the subject property, and existed at the time of the enactment of the provisions from which a variation is sought or was created by natural forces or was the result of governmental action, other than the adoption of this Code, for which no compensation was paid.*

The undersized property was not created by the owner or applicant, however, the home itself is currently under construction and was created by the applicant's Architect.

4.) *Not Merely Special Condition. The alleged hardship or difficulty is not merely the inability of the owner or occupant to enjoy some special privilege or additional right not available to owners or occupants of other lots subject to the same provision, nor merely an inability to make more money from the use of the subject property; provided, however, that where the standards herein set out exist, the existence of an economic hardship shall not be a prerequisite to the grant of an authorized variation.*

The purpose of the variation is not based exclusively on a desire to make more money from the property and the granting of the requested variance would not be likely to constitute a special privilege or additional right not available to owners of other properties without a variance.

5.) *Code and Plan Purposes. The variation would not result in a use or development of the subject property that would be not in harmony with the general and specific purposes for which this Code and the provision from which a variation is sought were enacted.*

While, air conditioning units are not permitted in side yard setbacks, allowing them on this lot would not be significantly out of harmony with the intent of the zoning code. The proposed location would be permitted outright in the R-C Single-Family District, where this lot would still be considered undersized.

6.) Essential Character of the Area. The variation would not result in a use or development on the subject property that:
(a) Would be materially detrimental to the public welfare or materially injurious to the enjoyment, use, development, or value of property or improvements permitted in the vicinity; or
(b) Would materially impair an adequate supply of light and air to the properties and improvements in the vicinity; or
(c) Would substantially increase congestion in the public streets due to traffic or parking; or
(d) Would unduly increase the danger of flood or fire; or

(e) Would unduly tax public utilities and facilities in the area; or
(f) Would endanger the public health or safety.

The proposed variation would be unlikely to be materially detrimental to the public welfare or the use or value of nearby properties.

This variation request received printed public notice at least 15 days prior to the public hearing. Additionally, owners of properties within 200 feet of the subject property were notified.

Recommendation: Based on the materials presented and the public hearing, it is the recommendation of staff that the variation request of be accepted or denied.

Motion: The Zoning Board of Appeals may make a motion as follows:

Move to accept/deny the request for a variation to allow for two accessory structures in the required side yard setback for a single-family residence under construction at 485 Jefferson Avenue.

When it's warm, you'll be perfectly comfortable with these reliable single-stage air conditioners.

4SCU13LE & 4SCU13LB

Proven technology & exceptional value

With SEER ratings up to 14.00, these air conditioners deliver consistent efficiency and performance through the hottest of summers.

Only available in the Northern U.S. and Canada per Federal Government regulations.

Up to 14 SEER
MHT™ Technology
Integrated Compressor Protection
Single-Stage Scroll Compressor
Sealed Contactor with Lugs (13LE only)

Model shown ***4SCU13LE***

4SCU16LE & 4SCU14LB

A commitment to exceeding expectations

Delivering up to 16 SEER, the 4SCU16LE and 4SCU14LB are the perfect blend of higher efficiency, quality and quieter operation. Thoughtfully designed, these units may qualify for local utility rebates* and reduce energy bills, while providing a comfortable home environment. In addition, Omniguard Total Corrosion Protection Technology offers enhanced corrosion protection, lowering overall maintenance costs.

Up to 16 SEER
MHT Technology
Omniguard Total Corrosion Protection Technology
Compressor Sound Blanket (16LE only)
Integrated Compressor Protection
Single-Stage Scroll Compressor
Sealed Contactor with Lugs (16LE only)

Model shown ***4SCU16LE***

Efficiency · Reliability · Air Quality · Peace of Mind · Noise Reduction

Pro Series™ air conditioners offer ultimate control with up to twice the efficiency of older units.

4SCU16LS

A powerful combination of performance & efficiency

Offering 16 SEER efficiency, the 4SCU16LS saves you money every month, and may qualify for local utility rebates.* Because it operates at two different speeds, this air conditioner provides enhanced performance with improved control over temperature and humidity for healthier air throughout your home. Plus the 4SCU16LS constantly monitors itself for optimum performance and complete peace of mind.

Up to 16 SEER
MHT Technology
Compressor Sound Blanket
Integrated Compressor Protection
Two-Stage Scroll Compressor
Sealed Contactor with Lugs
Self-Diagnosing Control Board
Comfort Sync Thermostat Enabled
Comfort Sync Zoning

4SCU20LX

Extreme precision & maximum control

The 4SCU20LX true variable-capacity air conditioner helps keep your home's temperature precisely where you want it and may qualify for local utility rebates.* Rather than running at one or even two speeds, the inverter-driven scroll compressor changes speed in small increments for exact temperatures. Plus Comfort Sync™ zoning delivers precise temperatures from room to room for complete home temperature control.

Up to 20 SEER
MHT Technology
Compressor Sound Blanket
Swept Wing Fan Blades
Integrated Compressor Protection
True Variable Capacity Compressor
Sealed Contactor with Lugs
Self-Diagnosing Control Board
Comfort Sync Thermostat Enabled
Comfort Sync Zoning

Armstrong Air Pro Series air conditioners are Comfort Sync thermostat compatible for maximum control. Using a smartphone app, the Comfort Sync thermostat puts advanced temperature monitoring and adjustment right in your hands, no matter where you may be.

**Ask your Dealer for details.*

Models		4SCU13LE & 4SCU13LB	4SCU14LB & 4SCU16LE	4SCU16LS	4SCU20LX
Ideal Usage		Reliably maintains consistent temperatures	Increases efficiency and year-round comfort	Enhances performance and control over temperature and humidity	Delivers maximum control and precise temperatures
Features		**4SCU13LE & 4SCU13LB**	**4SCU14LB & 4SCU16LE**	**4SCU16LS**	**4SCU20LX**
SEER		*Up to 14 SEER*	*Up to 16 SEER*	*Up to 16 SEER*	*Up to 20 SEER*
ENERGY STAR® Certified		●	●	●	●
ENERGY STAR Most Efficient					●
Sealed Contactor w/Lugs		● *(LE)*	● *(LE)*	●	●
MHT™ Technology		●	●	●	●
Omniguard™ Total Corrosion Protection Technology			●		
Compressor Sound Blanket		● *(LE)*	● *(LE)*	●	●
Integrated Compressor Protection		●	●	●	●
True Variable Capacity Compressor					●
Scroll Compressor	*Two-Stage*			●	
	Single-Stage	●	●		
Comfort Sync™	*Thermostat Enabled*			●	● *(Required)*
	Zoning Compatible			●	●
	Control Board			●	●
Swept Wing Fan Blade for Noise Reduction					●
*10-Year Warranty**		●	●	●	●

*Product registration required. Warranty applies to residential applications only. For terms, conditions and exclusions, see full warranty at armstrongair.com.

ARMSTRONG AIR®
The Professional's Choice

Due to our policy of continuous improvement, specifications are subject to change without notice.

Printed in U.S.A.

©2018 Allied Air Enterprises LLC, a Lennox International Inc. Company

Form No. A4SCUFL-300 (11/18) PC90759

ENERGY STAR

Intertek

LIMITED PARTS 10-YEAR WARRANTY

AHRI CERTIFIED® www.ahridirectory.org Unitary Small AC AHRI Standard 210/240

AHRI CERTIFIED® www.ahridirectory.org Unitary Small AC AHRI Standard 210/240

OMNIGUARD™

Canada ENERGUIDE
Seasonal Energy Efficiency Ratio (SEER)
Central Air Conditioners
THIS MODEL 13.0-20.0
13.0 — Uses least energy → 26.0

Proper sizing and installation of equipment is critical to achieve optimal performance. Split system air conditioners and heat pumps must be matched with appropriate coil components to meet ENERGY STAR criteria. Ask your contractor for details or visit www.energystar.gov.

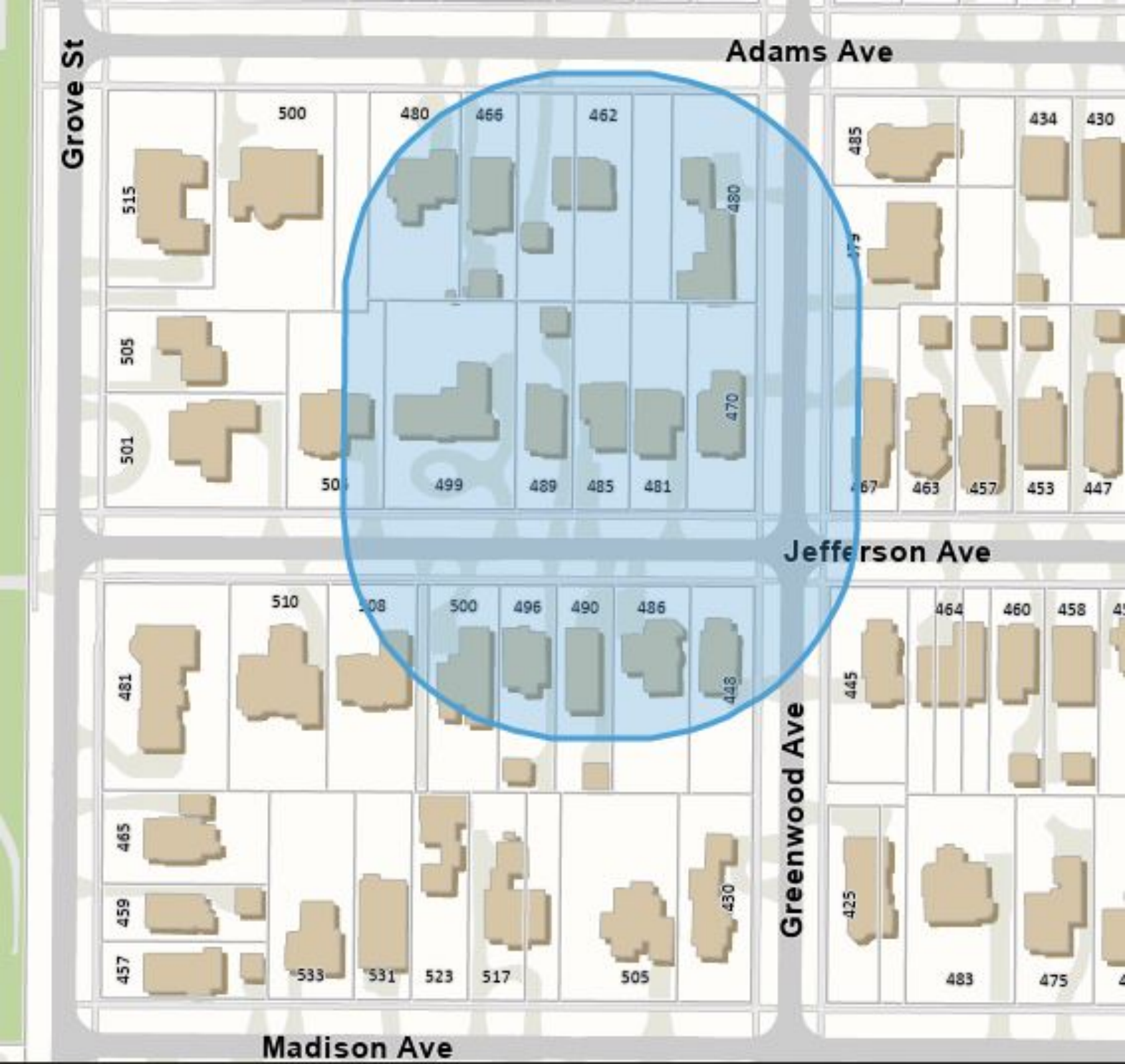
Grove St
Adams Ave
Jefferson Ave
Greenwood Ave
Madison Ave
500
480
466
462
515
505
501
499
489
485
481
470
485
434
430
463
457
453
447
510
500
496
490
486
481
465
459
457
533
531
523
517
505
430
445
464
460
458
425
483
475