City of San Juan Bautista

The "City of History"

www.san-juan-bautista.ca.us

HISTORIC RESOURCES BOARD
TUESDAY, MAY 9, 2023, 6:00 P.M.
(Continued from May 2, 2023)

HYBRID MEETING
City Hall, Council Chambers
311 Second Street, San Juan Bautista, California

AGENDA

ZOOM WEBINAR PARTICIPATION
The meeting can also be accessed by the public in the following methods: Through Zoom (https://zoom.us/join) per the instruction stated below, and on Facebook.

JOIN ZOOM WEBINAR TO PARTICIPATE LIVE
https://us02web.zoom.us/j/86357637623

To participate telephonically:
call 1 (669) 900-6833
Webinar ID: 863 5763 7623

1. **CALL TO ORDER**
   A. Pledge of Allegiance
   B. Roll Call

2. **GENERAL PUBLIC COMMENT**
   Public comments generally are limited to three minutes per speaker on items that are not on the agenda and are under the City's subject matter jurisdiction. The Chair may further limit the time for public comments depending on the agenda schedule.

   SUBMISSION OF PUBLIC COMMENTS PROCEDURES
   If you wish to make a general public comment and are attending in person, please fill out a speaker card. If you are attending via Zoom, join the Zoom Webinar, and use the "Raise Hand" or if joining by telephone, press *9 on your telephone keypad icon.

   Written comments may be submitted via mail to the Deputy City Clerk at City Hall (P.O. Box 1420, San Juan Bautista, CA 95045), or emailed to deputycityclerk@san-juan-bautista.ca.us no later than 4:00 p.m. on the day of the meeting. Written comments will be read into the record provided that the reading does not exceed three (3) minutes.

3. CONSENT

All matters listed under the Consent Agenda may be enacted by one motion unless a member of the Planning Commission or the public requests discussion or a separate vote.

A. Approve the Affidavit of Posting Agenda.

B. Approve the Minutes of April 11, 2023.

4. DISCUSSION AND INFORMATION

A. 45 Washington Street: presentation - historic resource evaluation

B. 701 Third Street: presentation - historic resource evaluation

5. COMMENTS

A. Historic Resources Board Members - California Preservation Conference: member reports

B. Community Development Director

6. ADJOURNMENT

AGENDA MATERIAL / ADDENDUM

Any addendums will be posted within 72 hours of regular meetings or 24 hours of special meetings, unless otherwise allowed under the Brown Act. City Council reports may be viewed at the City of San Juan Bautista City Hall at 311 Second Street San Juan Bautista, and are posted on the City website www.san-juan-bautista.ca.us subject to Staff's ability to post the documents before the meeting, or by emailing deputycityclerk@san-juan-bautista.ca.us or calling the Deputy Clerk (831) 623-4661 during normal business hours.

In compliance with the Americans with Disabilities Act, and Govt. Code 54953(e)(1)(A), the City will make reasonable arrangements to ensure accessibility to this meeting. If you need special assistance to participate in this meeting, please contact the Deputy City Clerk a minimum of 48 hours prior to the meeting at (831) 623-4661.

PUBLIC NOTIFICATION

This agenda was posted on Wednesday, May 3, 2023, on the bulletin board at City Hall, 311 Second Street, the bulletin board at the City Library, 801 Second Street, the bulletin board at the entrance to the United States Post Office, 301 The Alameda, and the City's website.

Meetings are streamed live at https://www.facebook.com/cityofsanjuanbautista/.

CITY OF SAN JUAN BAUTISTA
HISTORIC RESOURCES BOARD
UNOFFICIAL MEETING MINUTES
APRIL 11, 2023

1. **CALL TO ORDER** – Chair DeVris called the meeting to order at 6:00 p.m., in the Council Chambers.

PLEDGE OF ALLEGIANCE
Board member Newkirk-Smith led the pledge of allegiance

ROLL CALL

Present:
Board member Jose Aranda
Board member Dan DeVries
Board member David Medeiros
Board member Mishele Newkirk-Smith

Absent:
Board member Tony Correia

Staff Present:
Brian Foucht, Assistant CM/Community Development Director
Trish Paetz, Administration

2. PROCLAMATION
National Preservation Month, May 2023
A. Public Building 203 Fourth Street – Native Daughters of the Golden West, Parlor 179
B. Private Building 201 Fourth Street – Drew and Peggy Naubauer

Chair DeVris asked the item to be continued to the next Historic Resources Board meeting.

Board member Medeiros is to prepare plaques to present to the two awardees during the May meeting.

Received comments from the following members of the public:
Georgiana Gularte
Wanda Guibert

3. PUBLIC COMMENT
No public comment received.

4. CONSENT
A. Affidavit of Posting Agenda

B. Approve the Minutes of March 7, 2023

No public comment received.

MOTION:
Upon motion by Board member Aranda, second by Board member Newkirk-Smith, Consent Agenda items A and B was approved.

AYES: Commissioners: Aranda, Medeiros, Newkirk-Smith, and Chair DeVries; NOES: None; ABSTAIN: None; ABSENT: Board member Correia. Motion Carried.

5. COMMENTS
A. Historic Resources Board members
No comments.

B. Community Development Director
No comments.

6. ADJOURNMENT
Motion to adjourn the meeting by Board member Madeiros, second by Board member Aranda. All in favor. There being no further business, Chair DeVries adjourned the meeting at 6:28 p.m.

APPROVED:

_____
Dan DeVries, Chair

ATTEST:

_____
Elizabeth Soto, Deputy City Clerk

State of California -- The Resources Agency
DEPARTMENT OF PARKS AND RECREATION

PRIMARY RECORD

Primary # _____
HRI # _____
Trinomial _____
NRHP Status Code _____

Other Listings _____
Review Code _____ Reviewer _____ Date _____

 *Resource Name or #: (Assigned by recorder) Japanese School/Velasco House

P1. Other Identifier: 45 Washington Street

*P2. Location: ☐ Not for Publication ☒ Unrestricted *a. County San Benito

and (P2b and P2c or P2d. Attach a Location Map as necessary)

*b. USGS 7.5′ Quad Monterey Date 2012 T ; R ; ¼ of ¼ of Sec ; Mount Diablo B.M.

c. Address 45 Washington St City San Juan Bautista Zip 95045

d. UTM: (Give more than one for large and/or linear resources) Zone ; mE/ mN

e. Other Locational Data: (e.g., parcel #, directions to resource, elevation, etc., as appropriate)
APN 002-410-024

*P3a. Description: (Describe resource and its major elements. Include design, materials, condition, alterations, size, setting and boundaries)

Built in the 1950s, the wood framed house located at 45 Washington Street (APN 002-410-024) has a rectangular plan and moderately pitched, front gable roof covered with composition shingles. The exterior walls have horizontal wood siding. The off-set front entrance is located on the east (front) elevation. A multipaned, vinyl sliding window is situated next to the door. A single door and two windows are located on the north elevation. The house has undergone multiple alterations as evidenced by wood siding that does not match up on the front and north elevations. A doorway was filled in on the north elevation however stairs leading to the former door are still in place. The rear of this house is attached to a board and batten building with a side gabled roof. Per San Juan Bautista's 2006 Context Statement, this building is estimated to date to the mid-nineteenth century. Tillie Todd, the current owner, states that the property has been in her family for five generations. (cont. p. 3)

*P3b. Resource Attributes: (List attributes and codes) HP2, Single family residence

*P4. Resources Present: ☒Building ☐Structure ☐Object ☐Site ☐District ☐Element of District ☐Other (Isolates, etc.)

P5b. Description of Photo: (View, date, accession #) Front Elevation, 04/2023

*P6. Date Constructed/Age and Sources: c. 1860; c. 1950 Historic ☐Prehistoric ☐Both
Oral History

*P7. Owner and Address:
Tillie Mary Todd
POB 317
San Juan Bautista, CA 95045

*P8. Recorded by: (Name, affiliation, and address)
Meg Clovis
14024 Reservation Rd.
Salinas, CA 93908

*P9. Date Recorded: 04/2023

*P10. Survey Type: (Describe)
Intensive

*P11. Report Citation: (cite survey report and other sources, or enter "none.") Reconnaissance Survey, 2006

*Attachments: ☐NONE ☐Location Map ☐Sketch Map ☒Continuation Sheet ☒Building, Structure and Object Record ☐Archaeological Record ☐District Record ☐Linear Feature Record ☐Milling Station Record ☐Rock Art Record ☐Artifact Record ☐Photograph Record ☐Other (List)

BUILDING, STRUCTURE, AND OBJECT RECORD

***NRHP Status Code 6Z**

***Resource Name or #** (Assigned by recorder) Japanese School/Velasco House

B1. Historic Name: Japanese School/Velasco House
B2. Common Name: Japanese School/Velasco House
B3. Original Use: School, Residence B4. Present Use: Residence
***B5. Architectural Style:** Vernacular
*B6. Construction History: (Construction date, alteration, and date of alterations) Constructed c. 1860; School moved & remodeled c. 1930; House addition c. 1950s; Date of alterations unknown
*B7. Moved? ☒No ☐Yes ☐**Unknown Date:** **Original Location:**
***B8. Related Features:** None
B9a. Architect: N/A b. Builder: Unknown
***B10. Significance: Theme** Non-European Cultural Group **Area** San Juan Bautista
Period of Significance: 1915-1930 **Property Type** Building **Applicable Criteria:** SJB A
(Discuss importance in terms of historical or architectural context as defined by theme, period, and geographic scope. Address integrity.)

The board and batten building located at 45 Washington Street is associated with the theme Non-European Cultural Group as identified in San Juan Bautista's 2006 Context Statement and specifically with Japanese Americans and Mexican Americans. The Context Statement identifies this building as San Juan Bautista's first Japanese School. Per Mary Velasco Sellen's memoir, *My Life in Old San Juan* (recorded, transcribed, compiled, and edited by Frances Tompkins), the building was located on Fourth Street and then relocated in 1930 by her father, Jesus Velasco, to the lot at 45 Washington Street. The 2006 survey form for the property notes that the front-gabled structure, attached to the former school building, was probably built in 1940, however the current owner, Tillie Todd, has stated that the building was constructed in the 1950s.
Per San Juan Bautista's Focused Context Statement (2006), the first Japanese residents of the San Juan Valley arrived in the early 1890s. They came looking for agricultural work and soon became the labor back bone for seed companies located in the area. In 1910 Ferry Morse Seed Company bought nearly 1000 acres of farmland between San Juan Bautista and Hollister and started cultivating flowers for seed. Several other companies followed their lead and before long flowers for seed (cont. p. 3)

B11. Additional Resource Attributes (List attributes and codes):
***B12. References:**
HP Zoning Ordinance
Mary Velasco Sellen Memoir
Records from Ancestry.com
National Register Bulletin 15
Galvan Assoc., 2006 SJB Context Statement & Survey
U.S. Census & Voter Registration Records
Lydon, Sandy. *The Japanese in the Monterey Bay Region*.
Todd, Tillie Mary. Personal Communication, 4/2023
B13. Remarks
***B14. Evaluator:** Meg Clovis
***Date of Evaluation:** 04/2023

(This space reserved for official comments.)

(Sketch Map with north arrow required.)

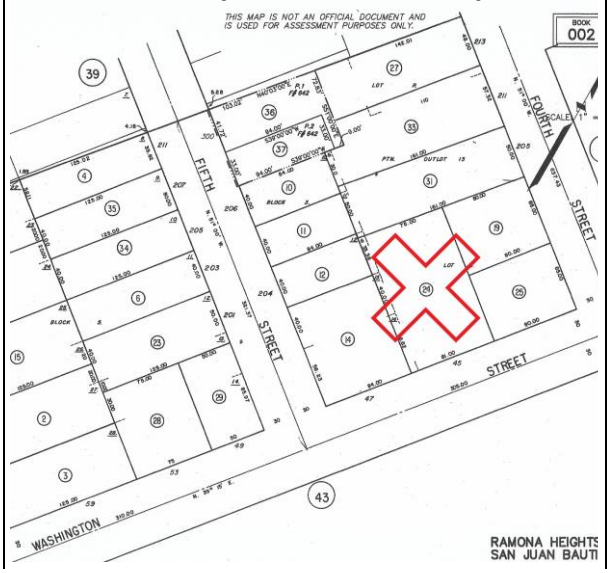

P3a. Description (continued):
Her grandmother's house (which was demolished) was originally located in front of the 1950s structure. There was a breezeway between the two buildings. Two other smaller structures, both used as residences, were once located at the rear lot line. The lot is not landscaped and both buildings are in poor condition.

Figure 1: Former Japanese School building

B10. Significance (continued):

were growing on over 2000 acres. The 1910 census reveals that almost half of San Benito County's Japanese residents worked at the seed farms.

The steady growth of San Juan Bautista's Japanese population led to the formation of the first Japanese School. The Context Statement relates, "The first schoolhouse was located in a small building near the corner of Fourth and Washington Streets.[1] It is still standing behind a single-family residence at 45 Washington Street. This small board and batten building was originally constructed in the mid-nineteenth century and was likely a single-family residence or outbuilding. In approximately 1915 it was adopted by the Japanese population for their educational facility and community hall." By 1930 the Japanese community had outgrown the original school building and a new facility was constructed at 708 First Street.

[1] Sellen's memoir contradicts this statement, and relates that her father moved the school in 1930 from Fourth Street to the present location.

Historian Sandy Lydon recounts that the first after-public school Japanese School opened in Alviso in 1911, and soon there were numerous other schools throughout California. The curriculum focused on teaching the Nisei[2] the Japanese language as well as traditional Japanese culture and geography. All Japanese Schools were closed with the onset of World War II.

When students transferred to the second Japanese School in 1930, the Velasco family moved into the old board and batten building. Jesus Maclas Velasco (1899-1961) was born in San Martin, Jalisco, Mexico and immigrated to the United States in 1923. He settled in San Juan Bautista where he found work as a carpenter in the local cement plant. With his carpentry skills he remodeled the old school into a residence.

Velasco's arrival in San Juan Bautista corresponds with events described in the Context Statement. The town's Mexican population started to increase in the 1920s during the turmoil of the Mexican Revolution, when many families moved north to escape political unrest and to work in California's agricultural industry. Some moved to San Juan Bautista on a seasonal basis while others found work, like Velasco, in the cement plant.

Figure 2: Rear elevation of former school building

Evaluation for Significance

Historians use *National Register Bulletin 15*[3] as a guide when evaluating a property's significance whether on a local, state, or national level. As a first step, to determine whether or not a property is significant, it must be evaluated within its historic context and the City of San Juan Bautista's Historic Context Statement[4] provides this context. The City of San Juan Bautista's Historic Preservation Ordinance (Chapter 11-06) reiterates the role of *National Register Bulletin 15* in the evaluation of historic resources. Adopted eligibility criteria are modeled on the California Register's four criteria.

[2] The second generation of Japanese immigrants. These children were American-born and American citizens.
[3] *How to Apply the National Register Criteria for Evaluation.* National Park Service. 1998.
[4] Galvan Preservation Assoc. *Historic Context Statement: San Juan Bautista.* 2006.

SJB Criterion A: the historic resource is associated with events that have made a significant contribution to the broad patterns of Federal, State, or local history and cultural heritage.

The 1950s structure is not eligible under this criterion as no specific event led to the construction of this residence and no important event took place in the building.

The board and batten section of the building was once a stand-alone building that was used as San Juan Bautista's first Japanese School between 1915 and 1930. It relates to the theme of Japanese Americans as described in San Juan Bautista's Context Statement and meets Criterion A eligibility.

SJB Criterion B: the historic resource is associated with lives of persons significant in our past.

None of the owners of the Japanese School building or the 1950s house are listed as prominent people in San Juan Bautista's Historic Context Statement, and they did not make significant contributions within any theme in the Context Statement. The subject buildings are not eligible under Criterion B.

Figure 3: Arrow indicates former location of door

SJB Criterion C: the historic resource embodies the distinctive characteristics of a type, period, region, or method of construction, or that represents the work of an important creative individual, or that possesses high artistic values.

The 1950s residence and Japanese School building are very modest structures that do not embody the distinctive characteristics of any architectural style. Neither building was constructed or designed by a master builder or architect. Neither building possesses high artistic values as they do not express aesthetic ideals or design concepts. The subject buildings are not eligible under Criterion C.

SJB Criterion D: the historic resource has yielded or may be likely to yield information important to prehistory and history.

This criterion is generally reserved for archeological sites. There is no evidence in the historical record that the buildings at 45 Washington Street meet the eligibility requirements for Criterion D.

Figure 4: Arrow indicates change in siding

Integrity

San Juan Bautista's Historic Preservation Ordinance defines **Integrity** as the authenticity of a historical resource's physical identity evidenced by the survival of characteristic's that existed during the resource's period of significance. Historical resources eligible for listing in the City of San Juan Bautista's Register of Historical Resources must retain enough of their historic character or appearance to be recognizable as historical resources and to convey the reasons for their significance. Integrity is evaluated with regard to the retention of location, design, setting, materials, workmanship, feeling, and association.

- **Location**: the Japanese School was moved from Fourth Street to its present location by Jesus Velasco c. 1930. The building is not in the same location as its period of significance (1915-1930).
- **Design**: the building has been remodeled several times since its use as a school and it no longer conveys the reason for its significance.
- **Setting**: it is unknown where the building was located on Fourth Street therefore the original setting has been lost.
- **Materials**: some of the presumably original board and batten siding is extant, however much of the original materials were lost when the 1950s house was attached to the school's front elevation.
- **Workmanship**: there is no evidence of any original workmanship that the school may have had.
- **Feeling**: due to major alterations the school no longer retains enough physical features to convey its historic character.
- **Association**: the school is no longer sufficiently intact to convey its relationship with San Juan Bautista's early Japanese community.

Summary

To be eligible for listing in the San Juan Bautista Register of Historic Resources an individual resource must exemplify or reflect special elements of the City of San Juan Bautista's architectural, artistic, cultural, engineering, aesthetic, historical, archaeological, natural, geological, scientific, educational, political, social, military, and other cultural heritage and possesses integrity of location, design, setting, materials, workmanship, feeling and association; and must meet at least one of the aforementioned criteria (A – D).

The 1950s building does not meet any of the listing requirements of the San Juan Bautista Register of Historic Resources. The former Japanese School building reflects the City's cultural heritage and meets Criterion A. It does not, however, retain integrity, and therefore is ineligible for listing in the City's Register of Historic Resources. In summary, *Bulletin 15,* the San Juan Bautista Context Statement, the San Juan Bautista Historic Preservation Ordinance, and the historical record support the conclusion that the buildings located at 45 Washington Street are not eligible for listing in the San Juan Bautista Register of Historic Resources.

Figure 5: Arrow indicates change in siding

State of California - The Resource Agency
DEPARTMENT OF PARKS AND RECREATION
PRIMARY RECORD

Primary #:
HRI #:
Trinomial:
NRHP Status Code: 7R
Other Listings:
Review Code: Reviewer:
Date: -/-/-

Survey #:
DOE #:

*Resource Name or #: 45 Washington Street; San Juan Bautista, CA 95045

P1. Other Identifier:

*P2. **Location:** ☒ not for publication ☐ unrestricted

a. **County:** San Benito **and**

b. USGS 7.5' Quad: _____ YEAR: _____ T ___ ; R ___ ; ___ of ___ of Sec ___ ; ___ B.M.

c. Address: 45 Washington Street City: San Juan Bautista State: CA Zip Code: 95045

d. UTM: Zone: _____ ; _____ mE/ _____ mN

e. Other Locational Data: APN: 24100240

*P3a. **Description:**

This building is a one-story, single-family residence that may have been constructed in the Craftsman style. It has a wood framed structural system with a wood foundation. The east facing façade is...*Continued below...*

*P3b. **Resource Attributes:** HP02,HP04

*P4. **Resources Present:** ☒ Building ☐ Structure ☐ Object ☐ Site ☐ District ☐ Element of a District ☐ Other

P5a. **Photograph or Drawing**

P5b. **Description of Photo:**
east facing facade

*P6. **Date Constructed/Age and Source:**
☒ Historic ☐ PreHistoric ☐ Both ☐ Neither

Year Built: 1940 - Estimated

*P7. **Owner and Address:**
Name: Todd, Tillie Mary
Address: P. O. Box 317
San Juan Bautista , CA 95045

*P8. **Recorded By:**
Wanda Guibert
Volunteer
Galvin Preservation Associates Inc.

*P9. **Date Recorded:** 08/16/2006

*P10. **Survey Type:** Survey - Reconnaissance

Survey Title: 2005 San Juan Bautista Survey

*P11. **Report Citation:**

"Updated Historic Context and Citywide Inventory of Architectural Resources Within the City of San Juan Bautista," Galvin Preservation Associates Inc., September, 2006.

***Attachments:**

☐ NONE ☐ Location Map ☐ Sketch Map ☒ Continuation Sheet ☐ Building, Structure, and Object Record
☐ Archaeological Record ☐ District Record ☐ Linear Feature Record ☐ Milling Station Record ☐ Rock Art Record
☐ Artifact Record ☐ Photograph Record Other:

*Resource Name or #: 45 Washington Street; San Juan Bautista, CA 95045

*Recorded by: Wanda Guibert *Date: 08/16/2006

☒ Continuation ☐ Update

P3a.Description (continued):

asymmetrical. The exterior is clad with horizontal wood siding. The building is covered by a moderately pitched, front gabled roof clad with composition shingles. The eaves have a moderate overhang, and there are attic vents within the gable; there are vinyl rain gutters.

The main entry at the façade consists of a single vinyl door with a fan lite; there are concrete steps with no landing. The wood board cladding is irregular where a porch once existed. Another entry is located on the north elevation and probably consists of a vinyl door. There is one window on the façade that consists of vinyl sash multi paned sliders, which are flanked by shutters. The windows on the other elevations are vinyl sash sliders and single hung windows.

The driveway is gravel and the pedestrian walkway is a combination of gravel and grass. There is no garage. However, there is what appears to be a modest worker's cottage located just to the rear of the main house. Its façade faces north. This rectangular plan building has board and batten cladding and a moderately pitched front gabled roof clad with composition material. There is a single door with a single window at the façade, both surrounded by casings. Landscaping elements are mature and include one tree, shrubs and grass.

Major alterations include replacement windows, doors, and porch enclosure. The shutters, and window and door surrounds are not original. The condition of the building is fair.

The remaining character defining features of what was likely a Craftsman residence and this property as a whole include:

- Rectangular plan
- Moderately pitched front gabled roof with moderate overhanging eaves
- Wood board exterior cladding
- A modest worker's cottage also located on this property

***Resource Name or #:** 45 Washington Street; San Juan Bautista, CA 95045

***Recorded by:** Wanda Guibert ***Date:** 08/16/2006

Description: north elevation
Photo Date: 11/10/2005

SHEET INDEX

Sheet number	Description
1	Title sheet, Site Plan, Vicinity Map, Pertinent Data
2	Unit 1 first floor plan, Unit 2 Second Floor Plan
3	Unit A and B first floor plan
4	Units 1 and 2 exterior elevations
5	Units A and B exterior elevations
6	Building Sections
7	General Notes

General Notes

GENERAL NOTES

--All construction unless otherwise indicated shall conform to 2019 edition of the CRC, CMC, CPC, CEC, Title 24, Federal ADA, and local codes and ordinances. In the event of conflict between codes and these drawings, the more stringent shall govern.
--Do not scale these drawings. Use the written dimensions and verify all dimensions prior to construction.
--These drawings are the property of the architect and are not to be used in part or in whole for any work other than the location shown herein.
--The architect shall not have control, or charge of and shall not be responsible for construction means, methods, techniques, sequences, or procedures or for any safety precautions or programs in connection with the work.
--Verify all utility data and locations prior to any work. Onsite utilities shall be coordinated with the appropriate agency or utility company.
--The contractor shall schedule and coordinate all inspections and at the end of the work provide the owner with all the original signed documents from the inspecting entity.
-- Annular spaces around pipe, electric cable, conduits and other openings in plates at exterior walls shall be protected against passage of rodents.
-- Recycle and/or salvage for reuse a minimum of 65% of the non-hazardous construction and demolition waste.
-- Use materials with not less than 10% recycled content value
-- Reduce construction waste by not less than 65%. Documentation shall be submitted to the enforcing agency demonstrating compliance.
-- Adhesives, sealants, and caulks shall be compliant with VOC and other toxic compound limits.
-- Paints stains and other coatings shall be compliant with VOC limits.
-- Aerosol paints and coatings shall be compliant with product weighted MIR limits for ROC and other toxic compounds
-- Documentation shall be provided to verify that compliant VOC limit finish materials have been used.
-- Carpet and carpet systems shall be compliant with VOC limits.
-- Vapor retarder and capillary break is installed at slab-on-grade foundations.
-- Moisture content of building materials used in wall and floor framing shall not exceed 19% and shall be check before enclosure

Ordinances and Regulations

2019 California Fire Code
2019 California Building Code
2019 California Plumbing Code
2019 California Mechanical Code
2019 California Electrical Code
2019 California CalGreen Code
2019 California Energy Standards
2019 California Residential Code
City of San Juan Bautista amendments and state regulatory requirements.

VICINITY MAP

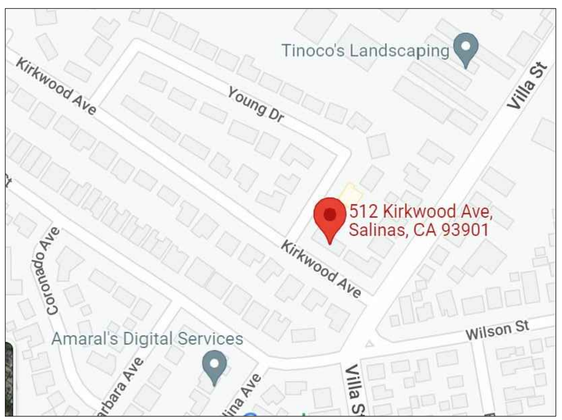

OWNER

OWNER:
Tyrone Todd
PO Box 317
San Juan Bautista, CA 95045

PERTINENT DATA

APN 002-410-024-000
Project Address: 45 Washington Street
San Juan Bautista
Zoning: R-2 (Medium Density Residential)
Occupancy Group: R-3/U
Construction Type: V-B Sprinklered

Parcel Size: 10,530 SF
Lot Coverage: 3448 SF or 32.7%
F.A.R. 4807 SF or 45.6%

Existing Duplex to be demolished: 1572 SF
Proposed Unit 1: 1584 SF
Proposed Unit 2: 1584 SF
Proposed Garage: 528 SF
Proposed Deck: 66 SF
Proposed ADU A: 585 SF
Proposed ADU B: 585 SF
Storage Unit A: 50 SF
Storage Unit B: 50 SF

Scope of Work
Demolish 1572 SF duplex and construct a two story duplex. Each unit to be 1584 SF with 4 bedrooms, 2 bathrooms and an attached single car garage for each unit. Construct two attached 585 SF ADU's. Each unit to be two bedroom, one bathroom and an attached 50 SF storage room

PARKING
2 car garage - one covered space for each Units 1 and 2
6 uncovered spaces

Fire Dept Notes

FIRE DEPARTMENT NOTES – (SPRINKLED)

1. These plans are in compliance with the 2019 California Fire and Building Codes and with applicable National Fire Protection Association Standard 13D and district amendments.
2. This building is R-3, Type V-B, and Sprinkled.
3. A public fire hydrant is within 600 feet of any portion of the building meeting the minimum required fire flow
4. The required available fire flow on this property is 1,000 gallons per minute for 120 minutes.
5. Before construction begins, temporary or permanent address numbers shall be posted. Permanent numbers must be posted prior to final inspection. Address numbers shall be posted on property so as to be clearly visible from the road. Address numbers must be in "Arabic" (1,2,3, etc.), not "Roman" (I,IV,etc.) or written out in words. Address numbers shall be a minimum of 6" tall, with wide stroke, and posted on a contrasting background, and visible from the street. Where numbers are not visible from the street, additional numbers shall be installed on a directional sign at the property driveway and the street.
6. Roof construction shall be Class A (min.) as defined by Uniform Building Code Standard 15-2.
7. There shall be a minimum of a 30 foot clearance maintained with non-combustible vegetation around all structures. Exception: Single specimens of trees, ornamental shrubbery, or similar plants used as ground covers, provided they do not form a means of rapidly transmitting fire from native growth to any structure.
8. Electric gates shall be provided with a keyed switch meeting fire department specifications. Gate entrances shall be at least the width of traffic lane, but in no case less than 12 feet in width. Gates must be 2 feet wider than required road width. Unobstructed vertical clearance shall not be less than 15 feet.
9. The installation of an approved spark arrestor shall be placed on top of the chimney. Wire mesh not to exceed ½ inch. (When adding a new fireplace or wood stove).
10. All requirements of the Single Family Dwelling Guide must be met.
11. Smoke detectors are required in all sleeping rooms and in hallways outside of sleeping rooms within 10 feet of sleeping room doors.
12. Carbon Monoxide Alarms (CMA) are required outside all sleeping rooms within 10 feet of sleeping room doors.
13. All buildings shall be equipped with an automatic sprinkler system complying with the latest edition of NFPA 13D currently adopted standards of the Santa Cruz County Fire Chief's Association.
14. Fire alarm flow switch shall be wired to kitchen refrigerator circuit. Any deviations require fire dep't. approval.
15. A 48 hour minimum notice to the fire department is required prior to any inspection and/or test.
16. The sprinkler installer shall submit three (2) sets of plans and calculations for the automatic sprinkler system to the fire agency for approval.
17. The copies of the building and fire system plans and permits must be on site during construction.
18. All underground piping systems shall comply with the County Standard FPO-005 and shall require plan submittal and permit approval prior to installation. The standard is available at the Santa Cruz Fire Marshall's Office.
19. An UNDERGROUND FIRE PROTECTION SYSTEM WORKING DRAWING must be prepared by the designer/installer. The plans shall comply with the UNDERGROUND FIRE PROTECTION SYSTEM INSTALLATION POLICY HANDOUT. Underground plan submittal and permit will be issued to a Class C-16, owner-builder of an owner-builder occupied SFD, or a C-36 plumbing contractor.
15. The driveway/access road shall be in place prior to any framing construction, or construction will be stopped.

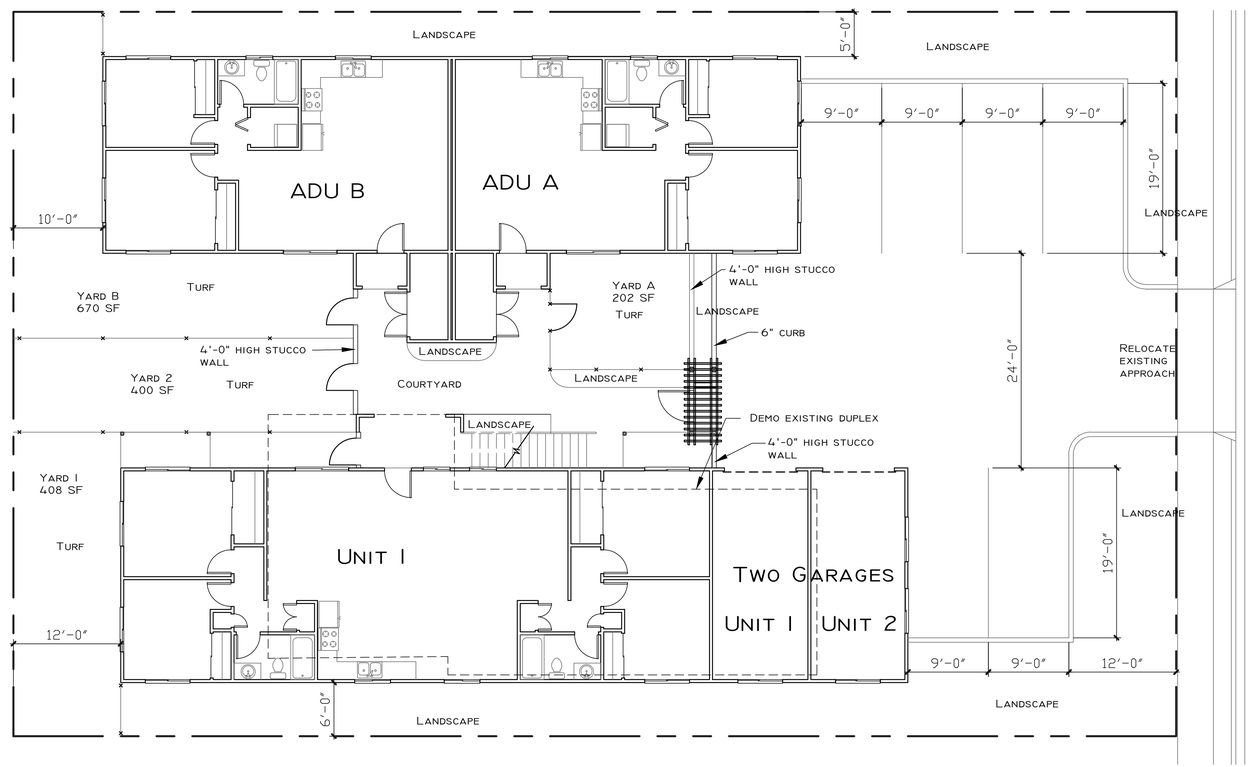

Site Plan

1"=8'

Revision date	Key

Drawing date: 10-24-22

ALL SUBJECT TO THE ARCHITECT'S REVIEW AND APPROVAL. ALL DIMENSIONS SPECIFIED MUST BE VERIFIED ON THE JOB SITE. ANY ERRORS, OMISSIONS OR DISCREPANCIES MUST BE REPORTED TO THE ARCHITECT BEFORE ANY WORK IS BEGUN. NOR ANY METHODS, PROCEDURES, OR ACTIONS AMENDED, BUT FOR THE SAFE, ADEQUATE, AND PROFESSIONAL ACCEPTABLE CONSTRUCTION PRACTICE. OWNER'S RESPONSIBILITY.

JAMES "JIM" VOCELKA
ARCHITECT
9020 KAREN DR.
SANTA ANA, CALIFORNIA 92707
PHONE: 831-663-6844
FAX: 831-663-6840
LICENSE NUMBER: C-19956

Ability Visionaries Inc.

Sheet title: Proposed First Floor Plan
Proposed Second Floor Plan
Details
–

Project: New Multi Family Residence for:
Tyrone Todd
45 Washington Street
San Juan, CA 95045
A.P. # 002-410-024 PHONE: (818)-590-2747

LICENSED ARCHITECT JAMES T. VOCELKA EXP. 1-31-23 No. C-19956 STATE OF CALIFORNIA

Scale	AS NOTED
Drawn	CADD
Job	–
Sheet	1
of	7 sheets

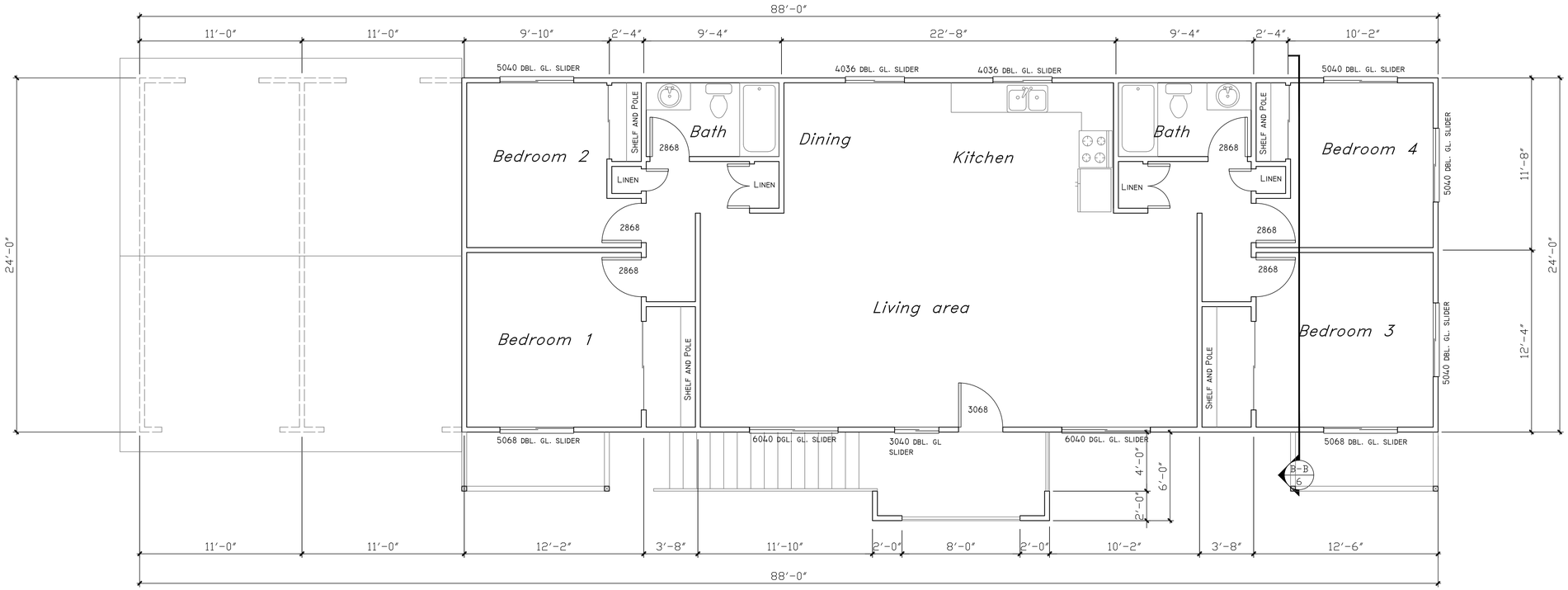

Proposed Second Floor Plan

1/4"=1'

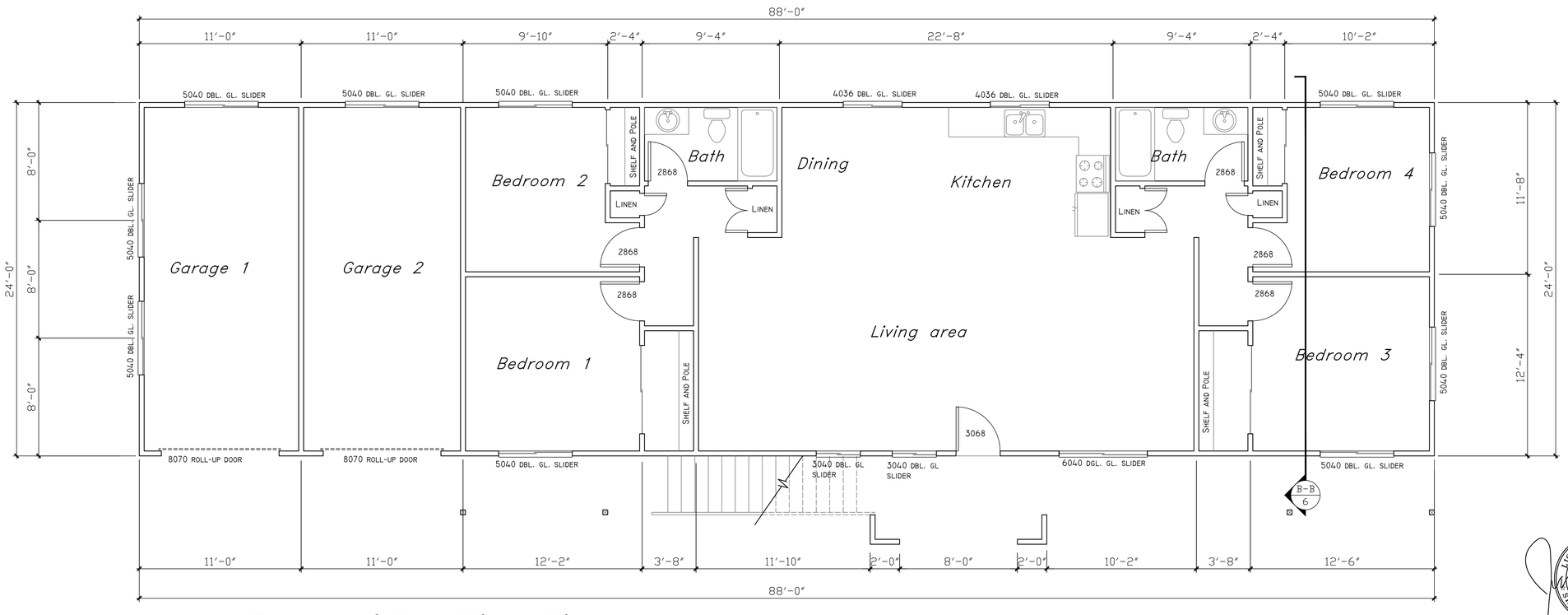

Proposed First Floor Plan

1/4"=1'

REVISION DATE	KEY

DRAWING DATE:
10-24-22

ANY USE OF THESE PLANS AND SPECIFICATIONS OTHER THAN FOR THE SITE FOR WHICH THEY WERE PREPARED IS PROHIBITED. THE REPRODUCTION OF THESE PLANS IN WHOLE OR IN PART, BY ANY METHOD, IS PROHIBITED WITHOUT THE WRITTEN PERMISSION OF THE ARCHITECT. THIS PLAN IS INTENDED TO BE CONSTRUCTED IN ACCORDANCE WITH THE CURRENT CODES, LAWS, AND REGULATIONS OF THE JURISDICTION OF THE SITE. RESTRICTIONS MAY APPLY.

Ability Ventures INC.

JAMES "JIM" VOCELKA
ARCHITECT
9020 KAREN
SANTA MARIA DR.
SALINAS, CALIFORNIA 93907
PHONE: 831-663-6844
FAX: 831-663-6840
LICENSE NUMBER: C-19956

SHEET TITLE
Proposed First Floor Plan
Proposed Second Floor Plan
Details
–

PROJECT
New Multi Family Residence for:
Tyrone Todd
45 Washington Street
San Juan, CA 93045
A.P. # 002-410-024 PHONE:(818)-590-2747

LICENSED ARCHITECT
JAMES L. VOCELKA
EXP. 1-31-23
No. C-19956
STATE OF CALIFORNIA

SCALE	AS NOTED
DRAWN	CADD
JOB	–
SHEET	2
OF	6 SHEETS

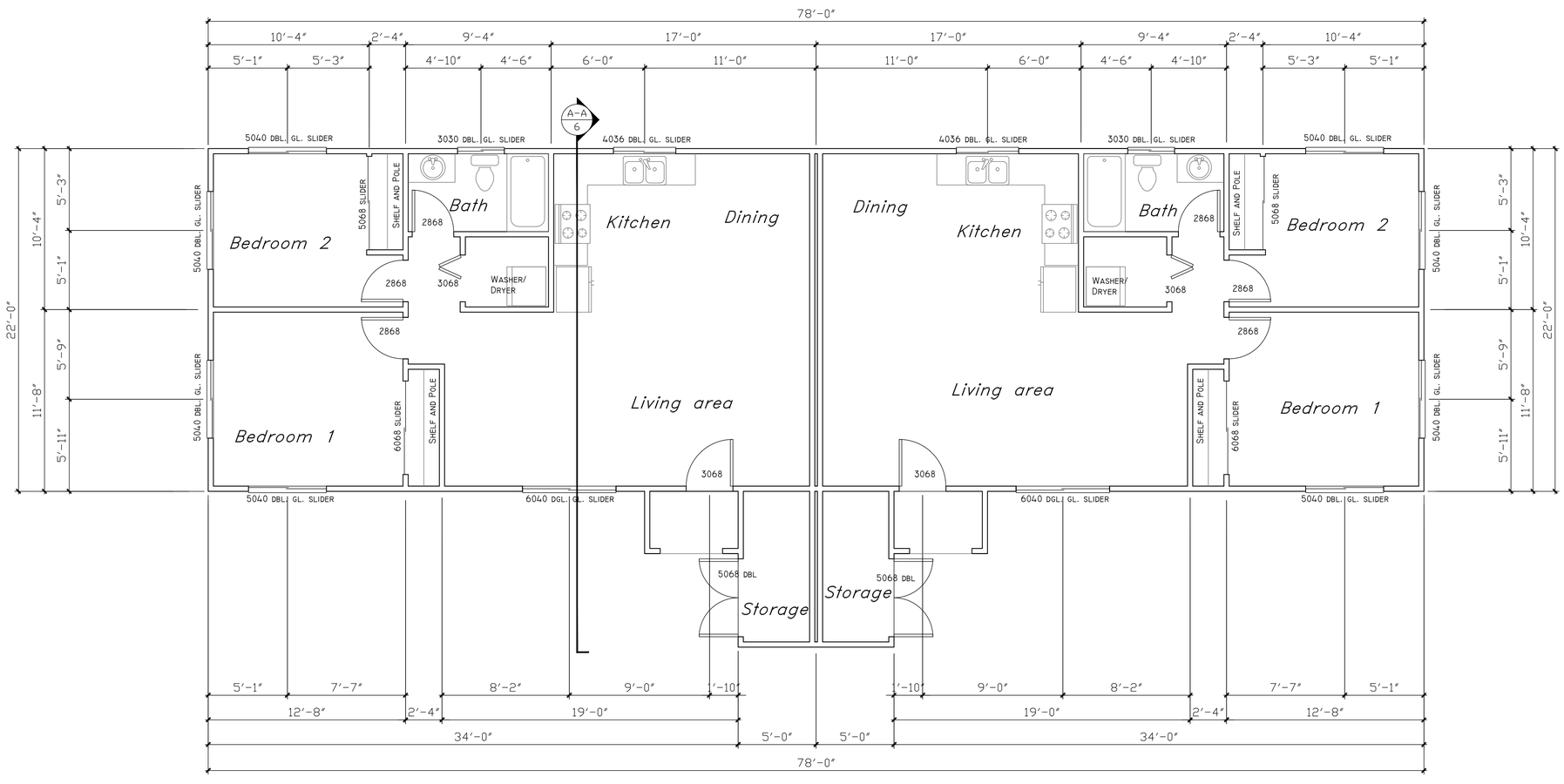

Proposed First Floor Plan

1/4"=1'

REVISION DATE	KEY

DRAWING DATE:
10-24-22

ALL USE OF THESE PLANS AND SPECIFICATIONS SHALL BE RESTRICTED TO THE SITE FOR WHICH THEY WERE PREPARED. ALL RIGHTS, INCLUDING BUT NOT LIMITED TO, COPYRIGHT, PATENT, TRADEMARK AND TRADE SECRET RIGHTS, IN THE PLANS AND SPECIFICATIONS, OR ANY PART THEREOF, ARE RETAINED BY THE ARCHITECT. ANY USE OF THESE PLANS AND SPECIFICATIONS OTHER THAN FOR THE SITE AND PURPOSE INTENDED IS PROHIBITED WITHOUT THE ARCHITECT'S PRIOR WRITTEN CONSENT. ALL RIGHTS ARE RESERVED.

Ability Ventures INC.

JAMES "JIM" VOCELKA
ARCHITECT
9020 KAREN DR.
SANTA MARIA, CALIFORNIA 93907
PHONE: 831-663-6844
FAX: 831-663-6840
LICENSE NUMBER: C-19956

SHEET TITLE
Proposed First Floor Plan
–
Details
–

PROJECT
New Multi Family Residence for:
Tyrone Todd
45 Washington Street
San Juan, CA 93045
A.P. # 002-410-024 PHONE:(818)-590-2747

LICENSED ARCHITECT
JAMES L. VOCELKA
EXP. 1-31-23
No. C-19956
STATE OF CALIFORNIA

SCALE	AS NOTED
DRAWN	CADD
JOB	–
SHEET	3
OF	6 SHEETS

Proposed Exterior Elevations

1/4"=1'

0"

REVISION DATE	KEY

DRAWING DATE:
10-24-22

ALL USE OF THESE PLANS AND SPECIFICATIONS ARE RESTRICTED TO THE SITE FOR WHICH THEY WERE PREPARED. THESE PLANS AND SPECIFICATIONS MAY NOT BE REPRODUCED, CHANGED OR COPIED IN ANY FORM OR MANNER WHATSOEVER, NOR ARE THEY TO BE ASSIGNED TO ANY THIRD PARTY WITHOUT FIRST OBTAINING THE EXPRESSED WRITTEN CONSENT OF THE ARCHITECT. ANY LEGAL USE OF THESE PLANS AND SPECIFICATIONS OTHER THAN FOR THE SITE SPECIFIED IS PROHIBITED.

JAMES "JIM" VOCELKA
ARCHITECT
9020 KAREN
SANTA ANA, CA 92705
PHONE: 831-663-6844
FAX: 831-663-6840
LICENSE NUMBER: C-19956

SHEET TITLE
Exterior Elevations
–
Details
–

PROJECT
New Multi Family Residence for:
Tyrone Todd
45 Washington Street
San Juan, CA 95045
A.P. # 002-410-024 PHONE: (818)-590-2747

SCALE AS NOTED
DRAWN CADD
JOB –
SHEET 4
OF 6 SHEETS

LICENSED ARCHITECT
JAMES L. VOCELKA
EXP. 1-31-23
No. C-19956
STATE OF CALIFORNIA

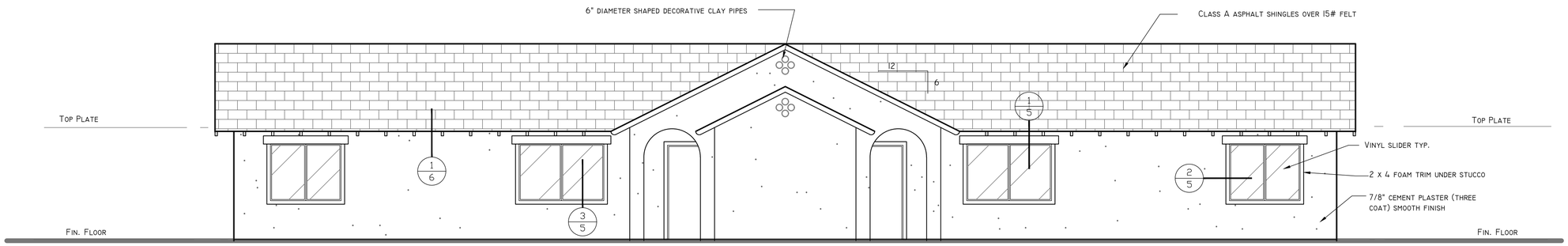

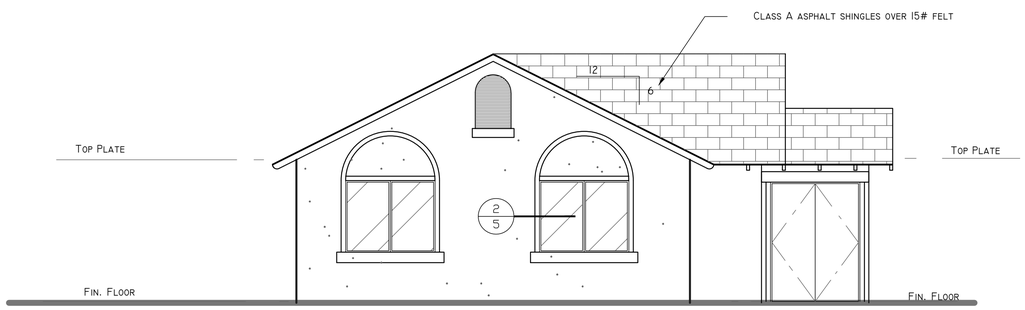

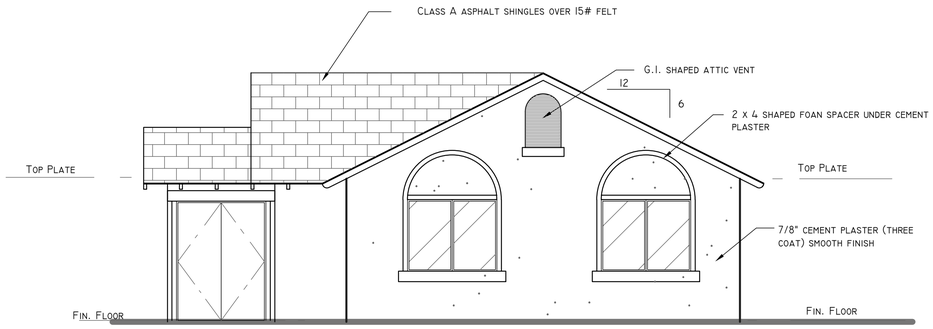

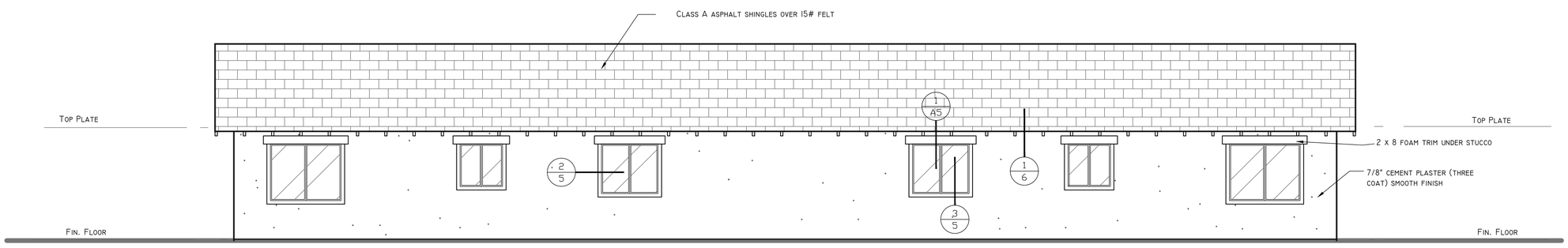

Proposed Exterior Elevations

1/4"=1' 0"

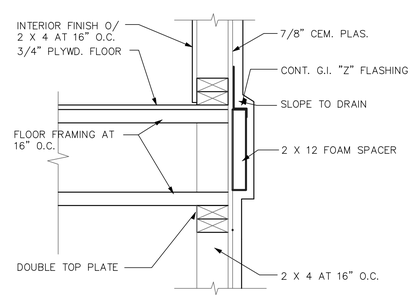

4 TRIM DETAIL

1-1/2"=1' 0" DETAIL NUMBER060601F

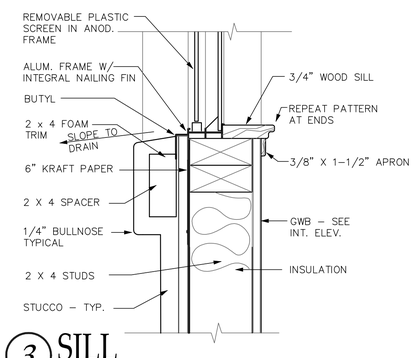

3 SILL

3"=1' 0" DETAIL NUMBER:086910C

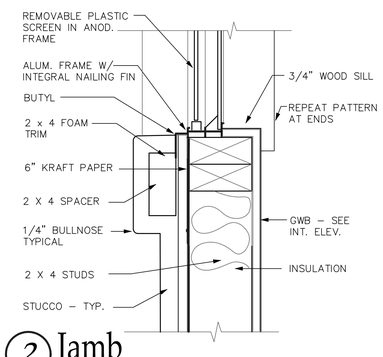

2 Jamb

3"=1' 0" DETAIL NUMBER:086910D

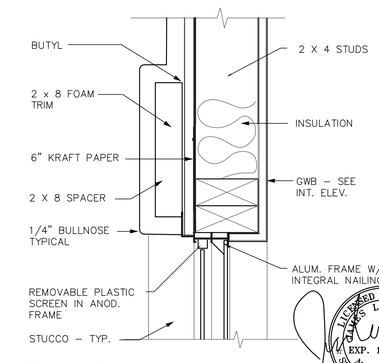

1 HEAD

3"=1' 0" DETAIL NUMBER:086910E

LICENSED ARCHITECT JAMES L. VOCELKA EXP. 1-31-23 No. C-19956 STATE OF CALIFORNIA

REVISION DATE	KEY

DRAWING DATE: 10-24-22

ALL USE OF THESE PLANS AND SPECIFICATIONS FOR ANY SITE OTHER THAN THE SITE FOR WHICH THEY WERE PREPARED IS PROHIBITED. THESE PLANS, SPECIFICATIONS, DESIGNS, IDEAS, ARRANGEMENTS AND METHODS REPRESENTED BY THESE PLANS AND SPECIFICATIONS ARE THE PROPERTY OF THE ARCHITECT AND MAY NOT BE USED FOR ANY PURPOSE NOT SPECIFICALLY AGREED TO IN WRITING BY THE ARCHITECT. ALL ARTISTIC EFFECTS, SKETCHES AND DIAGRAMS ARE SUBJECT TO ARCHITECTURAL COPYRIGHT RESTRICTIONS.

JAMES "JIM" VOCELKA
ARCHITECT
19020 KAREN DR.
SARATOGA, CALIFORNIA 93907
PHONE: 831-663-6844
FAX: 831-663-6840
LICENSE NUMBER: C-19956

Ability Visionaries INC.

SHEET TITLE
Exterior Elevations
–
Details
–

PROJECT
New Multi Family Residence for:
Tyrone Todd
45 Washington Street
San Juan, CA 95045
A.P. # 002-410-024 PHONE:(818)-590-2747

SCALE AS NOTED
DRAWN CADD
JOB –
SHEET 5 OF 6 SHEETS

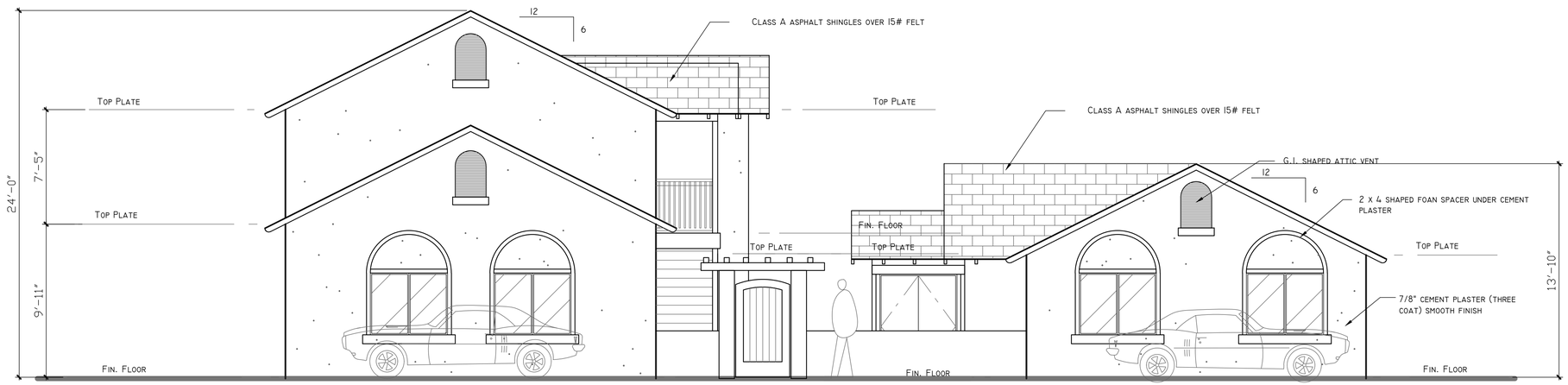

Street Elevation

REVISION DATE	KEY

DRAWING DATE:
10-24-22

ALL USE OF THESE PLANS AND SPECIFICATIONS FOR ANY SITE OTHER THAN WHERE SPECIFICALLY INDICATED IS PROHIBITED. THESE PLANS, SPECIFICATIONS, AND DESIGNS ARE THE PROPERTY OF THE ARCHITECT AND MAY NOT BE REPRODUCED IN ANY METHOD OR FORM WITHOUT WRITTEN PERMISSION FROM THE ARCHITECT. THE ARCHITECT RETAINS ALL RIGHTS UNDER THIS LAW. THESE PLANS MUST BE KEPT ON THE JOB SITE DURING CONSTRUCTION. ALL WORK SHALL COMPLY WITH THE 2019 CALIFORNIA BUILDING CODE UNLESS RESTRICTIONS OTHERWISE.

Ability Visionaries INC.

JAMES "JIM" VOCELKA
ARCHITECT
9020 KAREN DR.
SANTA MARIA, CALIFORNIA 93907
PHONE: 831-663-6844
FAX: 831-663-6840
LICENSE NUMBER: C-19956

SHEET TITLE
Street Elevation
–
Details
–

PROJECT
New Multi Family Residence for:
Tyrone Todd
45 Washington Street
San Juan, CA 95045
A.P. # 002-410-024 PHONE:(818)-590-2747

SCALE AS NOTED
DRAWN CADD
JOB –
SHEET 8
OF 6 SHEETS

Central Cal Landscape
Patrick Rodriguez
831-223-7905
patrickrodrguez@gmail

Plant Legend:
- lavender
- rosemary
- Blue Oat grass
- Bottle Brush
- potatoe plant (trellis area)

Landscape Notes:
1) All proposed trees are rated low water use
2) Use 3" mulch in 5' diameter at each proposed shrubs to help retain moisture.
3) Dont trench to close to structure, do not install plants to close to building, curb's, property.

VICINITY MAP

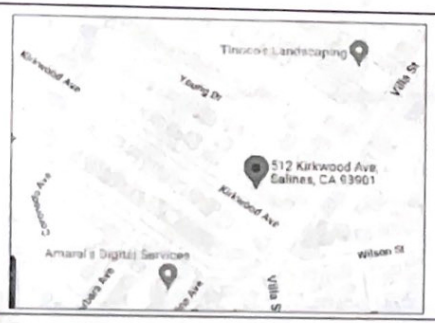

OWNER

OWNER
TYRONE TODD
PO BOX 317
SAN JUAN BAUTISTA, CA 95045

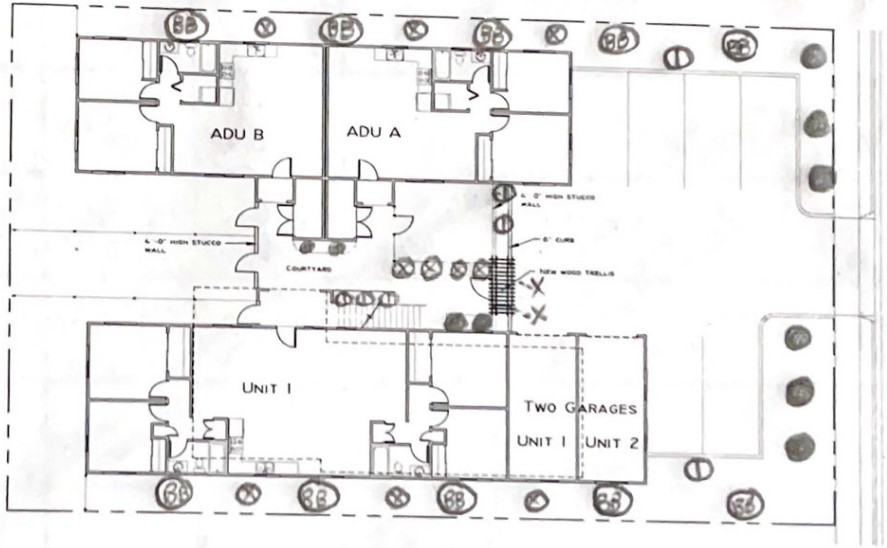

Landscape Plan
1"=8'

REVISION DATE | KEY

DRAWING DATE 10-24-22

JAMES "JIM" VICCELLA ARCHITECT

Ability Works Inc.

SHEET TITLE
Prelim. Landscape Plan
-
Details
-

PROJECT
Tyrone Todd Family Residence for:
Tyrone Todd
45 Washington Street
San Juan, CA 95045
A.P.N. # 002-410-024 PHONE: (818)-580-2747

SCALE AS NOTED
DRAWN CADD
JOB -
SHEET L1
OF 7 SHEETS

Street Elevation

State of California -- The Resources Agency
DEPARTMENT OF PARKS AND RECREATION

PRIMARY RECORD

Primary # _____
HRI # _____
Trinomial _____
NRHP Status Code _____

Other Listings _____
Review Code _____ Reviewer _____ Date _____

 *Resource Name or #: (Assigned by recorder) Bill and Minnie German House

P1. Other Identifier: 701 Third Street

*P2. Location: ☐ Not for Publication ☒ Unrestricted *a. County San Benito

and (P2b and P2c or P2d. Attach a Location Map as necessary)

*b. USGS 7.5′ Quad Monterey Date 2012 T ; R ; ¼ of ¼ of Sec ; Mount Diablo B.M.

c. Address 701 Third Street St. City San Juan Bautista Zip 95045

d. UTM: (Give more than one for large and/or linear resources) Zone ; mE/ mN

e. Other Locational Data: (e.g., parcel #, directions to resource, elevation, etc., as appropriate)
APN 002-100-025

*P3a. Description: (Describe resource and its major elements. Include design, materials, condition, alterations, size, setting and boundaries)
Built about 1907, the one-story, wood framed Folk style house located at 701 Third Street (APN 002-100-025) has a rectangular plan and horizontal wood siding. The side gabled roof with a back extension creates a saltbox profile. Composition shingles cover the roof. A full-width front porch with an extended roof is located on the front elevation. Four simple square posts support the porch roof. The porch itself is a raised concrete slab. The symmetrical façade has a central door with a multi-paned window in the upper half. It does not appear to be original. Single pane double-hung windows are located on either side of the door. Each window has faux louvred shutters as do the windows on the west elevation. The front yard has pavers surrounded by a Victorian style metal fence. A one-car garage with a non-original door is located in the backyard. An ADU was built in the backyard about 2005. It replaced a "casita" that was the home of Rueben Lopez and was built by his son-in-law about 1935. (cont. p. 3)

*P3b. Resource Attributes: (List attributes and codes) HP2, Single family residence

*P4. Resources Present: ☒Building ☐Structure ☐Object ☐Site ☐District ☐Element of District ☐Other (Isolates, etc.)

P5b. Description of Photo: (View, date, accession #) Front Elevation, 04/2023

*P6. Date Constructed/Age and Sources: c. 1907 Historic ☐Prehistoric ☐Both Oral History

*P7. Owner and Address:
Jimenez
701 Third St.
San Juan Bautista, CA 95045

*P8. Recorded by: (Name, affiliation, and address)
Meg Clovis
14024 Reservation Rd.
Salinas, CA 93908

*P9. Date Recorded: 04/2023

*P10. Survey Type: (Describe)
Intensive

*P11. Report Citation: (cite survey report and other sources, or enter "none.") Galvan Reconnaissance Survey, 2006

*Attachments: ☐NONE ☐Location Map ☐Sketch Map ☒Continuation Sheet ☒Building, Structure and Object Record ☐Archaeological Record ☐District Record ☐Linear Feature Record ☐Milling Station Record ☐Rock Art Record ☐Artifact Record ☐Photograph Record ☐Other (List)

BUILDING, STRUCTURE, AND OBJECT RECORD

***NRHP Status Code 5S2**

***Resource Name or #** (Assigned by recorder) Japanese School/Velasco House

B1. Historic Name: Bill and Minnie German House
B2. Common Name: Bill and Minnie German House
B3. Original Use: Residence B4. Present Use: Residence
***B5. Architectural Style:** Folk
*B6. Construction History: (Construction date, alteration, and date of alterations) Constructed c. 1907; rear bedroom addition; Date of alterations unknown
*B7. Moved? ☒No ☐Yes ☐**Unknown Date:** **Original Location:**
***B8. Related Features:** ADU, detached garage
B9a. Architect: N/A b. Builder: Unknown
***B10. Significance: Theme:** Economic Decline & Boom **Area** San Juan Bautista
Period of Significance: 1907 **Property Type** Building **Applicable Criteria:** SJB C
(Discuss importance in terms of historical or architectural context as defined by theme, period, and geographic scope. Address integrity.)

Per local historians and Art Jones, the great grandson of Rueben Lopez, Rueben Lopez built both houses located at 609 and 701 Third Street for his daughters, Dena Marie (who lived at 609) and Minnie (who lived at 701). Both homes are visible on the 1908 Sanborn Map for San Juan Bautista. When constructed they were next door to the large Independent Lumber Company.
Rueben Lopez (1866-1957) was born in Aromas and worked as a farmer in San Benito County. He married Juanita Alvarado, and they had eight children, including Dena Marie and Minnie. Minnie married Bill German and they lived in the house at 701. Dena lived next door with her husband. After his wife's death in 1934, Rueben split his time between both houses but eventually moved into the "casita" that Bill built for him in their backyard. Bill made improvements to 701 including the one-bedroom addition at the rear.
The house at 701 was built during the same period of time that the cement plant opened (1906) which triggered a building boom in the town. It took its stylistic cues from earlier buildings while the newer Third Street residential neighborhoods adopted the Bungalow style.

B11. Additional Resource Attributes (List attributes and codes):
***B12. References:**
HP Zoning Ordinance
Art Jones Remembrances
Cara Vonk Remembrances
National Register Bulletin 15
Galvan Assoc., 2006 SJB Context Statement & Survey
U.S. Census & Voter Registration Records
McAlester, Virginia. *A Field Guide to American Houses*. 2019
Lopez, Juanita. Obit. *Gustine Standard*, 7/5/1934.
B13. Remarks
***B14. Evaluator:** Meg Clovis
***Date of Evaluation:** 04/2023

(This space reserved for official comments.)

(Sketch Map with north arrow required.)

P3a. Description (continued):
701 Third Street is a good example of the extended Hall-and-Parlor sub-style of the Folk style house. Character defining features include:

- Rectangular plan
- Side gable roof with extension
- Symmetrical façade
- Wood sash, double-hung windows
- Full width porch with simple supports

Figure 1: Front elevation

Figure 2: West elevation

B10. Significance (continued):

Figure 3: Rueben Lopez sitting on the porch with his grandsons.

Evaluation for Significance

Historians use *National Register Bulletin 15*[1] as a guide when evaluating a property's significance whether on a local, state, or national level. As a first step, to determine whether or not a property is significant, it must be evaluated within its historic context and the City of San Juan Bautista's Historic Context Statement[2] provides this context. The City of San Juan Bautista's Historic Preservation Ordinance (Chapter 11-06) reiterates the role of *National Register Bulletin 15* in the evaluation of historic resources. Adopted eligibility criteria are modeled on the California Register's four criteria.

SJB Criterion A: the historic resource is associated with events that have made a significant contribution to the broad patterns of Federal, State, or local history and cultural heritage.

701 Third Street is not eligible under this criterion as no specific event led to the construction of this residence and no important event took place in the building.

SJB Criterion B: the historic resource is associated with lives of persons significant in our past.

Neither Rueben Lopez or Bill and Minnie German are listed as prominent people in San Juan Bautista's Historic Context Statement, and they did not make significant contributions within any theme in the Context Statement. The subject building is not eligible under Criterion B.

---

[1] *How to Apply the National Register Criteria for Evaluation.* National Park Service. 1998.
[2] Galvan Preservation Assoc. *Historic Context Statement: San Juan Bautista.* 2006.

SJB Criterion C: the historic resource embodies the distinctive characteristics of a type, period, region, or method of construction, or that represents the work of an important creative individual, or that possesses high artistic values.

701 Third Street exhibits the distinctive characteristics of the Folk style of architecture. It was not constructed or designed by a master builder or architect. It does not possess high artistic values as the house does not express aesthetic ideals or design concepts. 701 Third Street is eligible for listing under the first part of Criterion C.

SJB Criterion D: the historic resource has yielded or may be likely to yield information important to prehistory and history.

This criterion is generally reserved for archeological sites. There is no evidence in the historical record that the building at 701 Third Street meets the eligibility requirements for Criterion D.

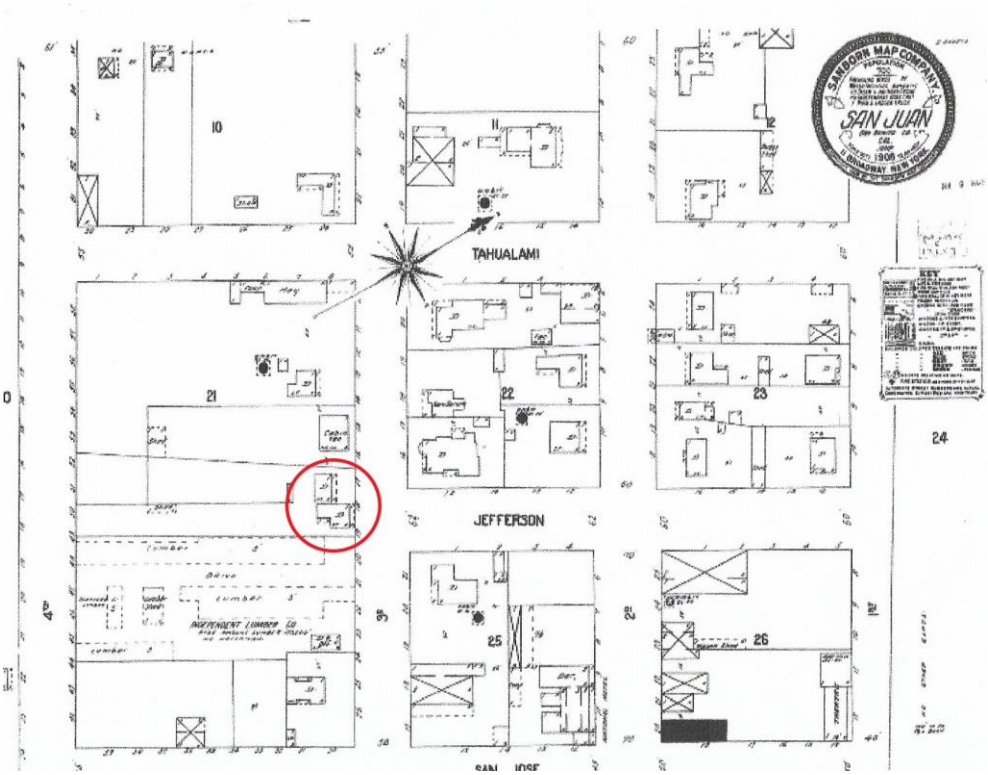

Figure 4: 1908 Sanborn Map showing 609 & 701 Third Street

Integrity

San Juan Bautista's Historic Preservation Ordinance defines **Integrity** as the authenticity of a historical resource's physical identity evidenced by the survival of characteristic's that existed during the resource's period of significance. Historical resources eligible for listing in the City of San Juan Bautista's Register of Historical Resources must retain enough of their historic character or appearance to be recognizable as historical resources and to convey the reasons for their significance. Integrity is evaluated with regard to the retention of location, design, setting, materials, workmanship, feeling, and association.

The house at

- **Location**: 701 Third Street is in the same location as its period of significance (1907).
- **Design**: the building was extended c. 1935 giving it a saltbox roof profile. Per McAlester, extensions on the Hall-and-Parlor subtype of Folk houses were very common and do not affect integrity. The residence still conveys the reason for its significance.

- **Setting**: 701 Third Street is still located in a residential setting.
- **Materials**: the majority of 701 Third Street's materials are intact such as the horizontal wood siding, porch posts, and window frames.
- **Workmanship**: 701 Third Street still reflects its original workmanship associated with a Folk style house.
- **Feeling**: the physical features that convey 701 Third Street's historic character are extant.
- **Association**: association is reserved for property's eligible for listing under criteria A or B.

Summary

To be eligible for listing in the San Juan Bautista Register of Historic Resources an individual resource must exemplify or reflect special elements of the City of San Juan Bautista's architectural, artistic, cultural, engineering, aesthetic, historical, archaeological, natural, geological, scientific, educational, political, social, military, and other cultural heritage and possesses integrity of location, design, setting, materials, workmanship, feeling and association; and must meet at least one of the aforementioned criteria (A – D).

The house at 701 Third Street is a good example of an early 20th century Folk style house that was built when San Juan Bautista was beginning to transition from a sleepy village to a wide-awake town with new residents and a new cement plant. It clearly contains the stylistic characteristics of the Folk style and has had few alterations since its construction, therefore retaining its integrity. 701 Third Street meets the eligibility requirements of Criterion C. In summary, *Bulletin 15,* the San Juan Bautista Context Statement, the San Juan Bautista Historic Preservation Ordinance, and the historical record support the conclusion that the house located at 701 Third Street is eligible for listing in the San Juan Bautista Register of Historic Resources.

State of California - The Resource Agency
DEPARTMENT OF PARKS AND RECREATION
PRIMARY RECORD

Primary #:
HRI #:
Trinomial:
NRHP Status Code: 7R
Other Listings:
Review Code: Reviewer:
Date: -/-/-

Survey #:
DOE #:

*Resource Name or #: 701 Third Street; San Juan Bautista, CA 95045

P1. Other Identifier:

*P2. **Location:** ☒ not for publication ☐ unrestricted

a. **County:** San Benito **and**

b. USGS 7.5' Quad: ____ YEAR: ____ T ___ ; R ___ ; ___ of ___ of Sec ___ ; ___ B.M.

c. Address: 701 Third Street City: San Juan Bautista State: CA Zip Code: 95045

d. UTM: Zone: ____ ; ____ mE/ ____ mN

e. Other Locational Data: APN: 21000250

*P3a. **Description:**

This building is a one-story, single-family residence constructed in the Folk style. It has a wood framed structural system. The foundation is concrete. The north facing façade is nearly symmetrical....*Continued below...*

*P3b. **Resource Attributes:** HP02

*P4. **Resources Present:** ☒ Building ☐ Structure ☐ Object ☐ Site ☐ District ☐ Element of a District ☐ Other

P5a. **Photograph or Drawing**

P5b. **Description of Photo:**
north facing facade

*P6. **Date Constructed/Age and Source:**
☒ Historic ☐ PreHistoric ☐ Both ☐ Neither

Year Built: 1900 - Estimated

*P7. **Owner and Address:**
Name: DeCarlo, John S. and Julie R.; Garcia, Alberto Z.
Address: P. O. Box 1127
San Juan Bautista , CA 95045

*P8. **Recorded By:**
Catherine Templeton
Volunteer
Galvin Preservation Associates Inc.

*P9. **Date Recorded:** 08/15/2006

*P10. **Survey Type:** Survey - Reconnaissance

Survey Title: 2005 San Juan Bautista Survey

*P11. **Report Citation:**

"Updated Historic Context and Citywide Inventory of Architectural Resources Within the City of San Juan Bautista," Galvin Preservation Associates Inc., September, 2006.

***Attachments:**

☐ NONE ☐ Location Map ☐ Sketch Map ☒ Continuation Sheet ☐ Building, Structure, and Object Record
☐ Archaeological Record ☐ District Record ☐ Linear Feature Record ☐ Milling Station Record ☐ Rock Art Record
☐ Artifact Record ☐ Photograph Record Other:

*Resource Name or #: 701 Third Street; San Juan Bautista, CA 95045

*Recorded by: Catherine Templeton *Date: 08/15/2006

☒ Continuation ☐ Update

P3a.Description (continued):

The exterior is clad with horizontal wood siding. The building is covered by a steeply pitched, side gabled roof clad with composition shingles. The boxed eaves have a moderate overhang. There are metal vents under the gables. There is an interior wood stove at the ridge of the roof.

There one visible full width porch located at the façade. It sits under an extended secondary shed roof and has rectangular wood posts. The steps and landing are concrete. The main entry consists of a single replacement wood and glass door. Any other entries could not be observed. There are two windows at the façade that are asymmetrically spaced. The east window is a vinyl slider added. The west window has a wood double hung sash window and wood sill. The secondary windows are wood double hung sash with wood sills. To the west there is a boxed garden window of vinyl.

There is a shed roof lean-to at the rear of the residence. There is a one car detached garage. The driveway and pedestrian walkway are concrete. The trees are mature mimosa and holly. There is also bamboo; there is a lawn. There are brick box planters at the façade.

The front door and a window at the façade were replaced in November, 2005. The condition of the building is good.

The character defining features of this Folk style residence include:

- Rectangular plan
- Steeply pitched side gabled roof
- Horizontal wood clapboard siding
- Full width roof sheltered by an exended secondary shed roof, supported by rectangular wood posts and with concrete steps and landing
- Wood sash, double hung windows
- Shed roof lean-to at the rear elevation

***Resource Name or #:** 701 Third Street; San Juan Bautista, CA 95045

***Recorded by:** Catherine Templeton ***Date:** 08/15/2006

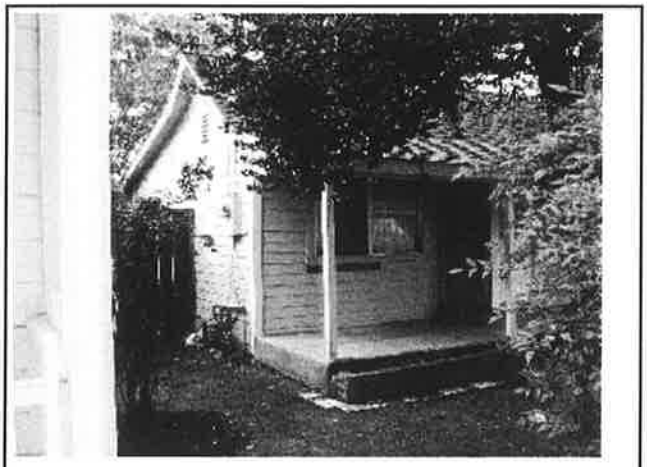

Description: east elevation
Photo Date: 11/10/2005

Description: west elevation
Photo Date: 11/10/2005

APPLICABLE CODES

CBC CALIFORNIA BUILDING CODE 2022

CRC CALIFORNIA RESIDENTIAL CODE 2022

CEC CALIFORNIA ELECTRICAL CODE 2022

CPC CALIFORNIA PLUMBING CODE 2022

CMC CALIFORNIA MECHANICAL CODE 2022

CENC CALIFORNIA ENERGY CODE 2022

CALGREEN CALIFORNIA GREEN BUILDING STANDARDS CODE 2022

ASCE 7 MINIMUM DESIGN LOADS FOR BUILDINGS AND 2022

SDPWS SPECIAL DESIGN PROVISIONS FOR WIND & SEISMIC 2022

DEF. SUBMITTALS/SPECIAL INSPECTIONS

PROJECT INFO

PROJECT DATA:

APN:	002-100-025-000
ADDRESS:	701 3RD ST. SAN JUAN BAUTISTA, CA 95045
FLOOD ZONE:	NO
BUILDING OCCUPANCY :	R3
CONSTRUCTION TYPE:	VB
STORIES:	1
HISTORIC:	NO

FLOOR AREA SUMMARY:

LOT AREA: 7,013 S.F.
EX. FRONT HOUSE LIVING: 747 S.F.
EX. REAR HOUSE LIVING: 504 S.F.
TOTAL LIVING:1,251 S.F.
EXISTING PORCHES: 180 S.F.
ADDITION:47 S.F.
TOTAL PROPOSED LIVING S.F.: 1,298 S.F.

SHEET INDEX

A0)	COVER SHEET
A1)	SITE PLAN
A2)	EX. / PR. FLOOR PLAN
A3)	EX. / PR. ELEVATIONS
A4)	SECTIONS/ELECTRICAL
S0-S1)	STRUCTURAL SHEETS
D1-D2)	STRUCTURAL DETAILS
NS)	NAILING SCHEDULE
T)	TITLE 24'S
MM)	MANDATORY MEASURES
CG1,2)	CALGREENS

PROJECT DIRECTORY

OWNER:
JIMENEZ FAMILY
701 3RD ST.
SAN JUAN BAUTISTA, CA 95045
209-923-2568

DESIGNER:
ALEX VALLES
SOUTH BAY DESIGN
831-207-9677
P.O. BOX 27
HOLLISTER, CA 95024

GENERAL PROJECT NOTES

1. PROJECT TO BE SUPERVISED BY A LICENSED GENERAL CONTRACTOR.

2. IN CASE OF CONFLICT OR DISCREPANCIES IN THE DRAWINGS. CONTRACTOR SHALL NOTIFY THE DESIGNER PRIOR TO PROCEEDING

3. PRIOR TO START OF WORK CONTRACTOR SHALL VERIFY ALL DIMENSIONS AND ENSURE ALL WORK IS BUILDABLE AS SHOWN.

4. REDUCE FORMALDEHYDE IN INTERIOR FINISH TO MEET CURRENT CARB AIRBORNE TOXIC CONTROL MEASURE (ATCM) FOR COMPOSITE WOOD.

5. FOR PLACEMENT OF SMOKE ALARMS AND CARBON MONOXIDE ALARMS IN ROOMS WITH VARIATIONS IN CEILING HEIGHT (SLOPED, PITCHED, ETC.) REFER TO THE MANUFACTURERS' GUIDELINES FOR PROPER PLACEMENT.

6. EXISTING HOUSE CONTAINS FIRE SPRINKLERS

7. AN AUTOMATIC FIRE SPRINKLER SYSTEM SHALL BE REQUIRED WHERE ADDITIONS OR ALTERATIONS ARE MADE TO THE EXISTING BUILDING THAT ALREADY HAS A FIRE SPRINKLER SYSTEM INSTALLED. SPRINKLERS SHALL BE INSTALLED TO PROTECT ALL AREAS OF A DWELLING UNIT. [R313.3.1.2.]
EXCEPTIONS:
1. ATTICS, CRAWL SPACES AND NORMALLY UNOCCUPIED CONCEALED SPACES THAT DO NOT CONTAIN FUEL-FIRED APPLIANCES DO NOT REQUIRE SPRINKLERS. IN ATTICS, CRAWL SPACES AND NORMALLY UNOCCUPIED CONCEALED SPACES THAT CONTAIN FUEL-FIRED EQUIPMENT, A SPRINKLER SHALL BE INSTALLED ABOVE THE EQUIPMENT; HOWEVER, SPRINKLERS SHALL NOT BE REQUIRED IN THE REMAINDER OF THE SPACE.
2. CLOTHES CLOSETS, LINEN CLOSETS AND PANTRIES NOT EXCEEDING 24 SQUARE FEET IN AREA, WITH THE SMALLEST DIMENSION NOT GREATER THAN 3 FEET AND HAVING WALL AND CEILING SURFACES OF GYPSUM BOARD.
3. BATHROOMS NOT MORE THAN 55 SQUARE FEET IN AREA.
4. DETACHED GARAGES; CARPORTS WITH NO HABITABLE SPACE ABOVE; OPEN ATTACHED PORCHES; UNHEATED ENTRY AREAS, SUCH AS MUD ROOMS, THAT ARE ADJACENT TO AN EXTERIOR DOOR; AND SIMILAR AREAS.

PROJECT CONST. NOTES

*IF APPLICABLE, ALL FILL MUST REACH 90% COMPACTION MINIMUM
*VERIFY LAYOUT OF BUILDING PAD W/OWNER OR DESIGNER PRIOR TO TRENCHING/DRILLING
*CONTRACTOR/OWNER ASSUMES RESPONSIBILITY OF LOCATING EXISTING UTILITIES PRIOR TO CONSTRUCTION
*VERIFY LAYOUT OF SIDEWALKS, PATIOS, & STEPS W/OWNER/CONTRACTOR PRIOR TO SETTING UP & POURING
*ADDRESS NUMBERS SHALL BE ARABIC NUMBERS OR ALPHABETICAL LETTERS ADDRESS SHALL BE PLAINLY VISIBLE & LEGIBLE FROM THE STREET OR ROAD FRONTING THE PROPERTY.
ADDRESS NUMBERS SHALL BE MINIMUM FUROF 4", 1/2 INCH MIN STROKE WIDTH, AND MOUNTED ON A
CONTRASTING BACKGROUND CLEARLY VISIBLE FROM THE STREET. WHERE ADDRESS CANNOT BE VIEWED FROM
A PUBLIC WAY, A MONUMENT OR POLE SHALL BE USED
* CHECK WITH PG&E FOR GAS SERVICE LOCATION
* ON AND AFTER JANUARY 1, 2014, RESIDENTIAL BUILDINGS UNDERGOING PERMITTED ALTERATIONS, ADDITIONS, OR IMPROVEMENTS SHALL REPLACE NON-COMPLIANT PLUMBING FIXTURES WITH WATER CONSERVING PLUMBING FIXTURES. PLUMBING FIXTURE REPLACEMENT IS REQUIRED PRIOR TO ISSUANCE OF A CERTIFICATE OF FINALCOMPLETION, CERTIFICATE OF OCCUPANCY OR FINAL PERMIT APPROVAL BY THE LOCAL BUILDING DEPARTMENT, SEE CIVIL CODE SECTION 1101.1 ET SEQ. FOR THE DEFINITON OF NON COMPLIANT PLUMBING FIXTURE, TYPESOF OTHER RESIDENTIAL BUILDINGS AFFECTED AND OTHER IMPORTANT ENACTMENT DATES SEE 2019 CALIFORNIA GREEN BUILDING CODE 301.1.1 & CIVIL CODE SECTION 1101.3 IN THE SUPPLEMENTAL BOOK

SCOPE OF WORK

COMBINE EXISTING TWO RESIDENCES (747 & 504 S.F. RESPECTIVELY) AND SMALL ADDITION (47 S.F.) TO CONNECT THEM. NEW LIVING QUARTERS WITH ALL INCLUDED TO BE A 1,298 S.F. SFD

PROJECT INFO

DESIGNS PRESENTED BY THESE DRAWINGS ARE THE PROPERTY OF SOUTH BAY DESIGN AND WERE DEVELOPED FOR USE ON THIS PROJECT ONLY. THIS DRAWING AND THE DESIGNS THEY REPRESENT SHALL NOT BE USED BY OR DISCLOSED TO ANY PERSON OR FIRM OUTSIDE THE SCOPE OF THIS PROJECT WITHOUT WRITTEN PERMISSION OF SOUTH BAY DESIGN

VICINITY MAP

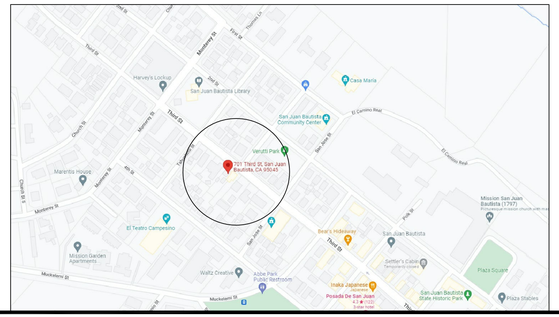

PROPOSED PROJECT:
701 3RD ST.
SAN JUAN BAUTISTA, CA 95045

REVISIONS

1	
2	
3	
4	
5	
6	
7	
8	

SOUTH BAY DESIGN
DBA
ALEX VALLES
PRINCIPAL/OWNER
P.O. BOX 339
SAN JUAN BAUTISTA, CA 95045
831.207.9677
sbdesign27@yahoo.com

ADDITION/REMODEL
JIMENEZ FAMILY
701 3RD ST.
SAN JUAN BAUTISTA, CA 95045

COVER SHEET

DRAWN BY	A.V.
CHECKED	
DATE	10.14.22
SCALE	
JOB NO.	
SHEET	A0

ARCHITECTURAL GENERAL NOTES

VENTILATION

1. LOCATION AND SIZE OF FOUNDATION VENTS TO CONFORM TO CRC R408.
2. PROVIDE UNDER ROOF CROSS VENTILATION AT THE RATE OF 1/150 OF THE ATTIC AREA. CRC R806.2.
3. BATHROOMS AND LAUNDRY ROOMS SHALL BE MECHANICALLY VENTILATED (50 CUBIC FT/MIN). THE POINT OF DISCHARGE MUST BE 3' MIN. ABOVE ANY BUILDING OPENINGS WITHIN 10'. HABITABLE ROOMS SHALL BE NATURALLY VENTILATED WITH CLEAR OPEN AREA NOT LESS THAN 4% OF THE FLOOR AREA OF THE ROOM.CRC.

ACCESS

4. PROVIDE UNOBSTRUCTED 18" MIN. BY 24" MIN. ACCESS TO ALL UNDERFLOOR SPACES WHERE JOISTS OR SUBFLOOR IS UNTREATED. CRC R408.4.
5. PROVIDE 22" MIN. BY 30" MIN. ACCESS TO ALL ATTIC SPACES WITH 30" CLEAR HEIGHT OR MORE. CRC R807. FIRE PROTECTION
6. ALL GARAGE WALLS COMMON WITH LIVING AREA TO BE 1/ 2" GYPSUM BOARD MINIMUM FROM FOUNDATION TOROOF SHEATHING ON THE GARAGE SIDE AT SEPARATION WALL BETWEEN GARAGE AND RESIDENCE. GARAGE SUPPORTING HABITABLE ROOMS ABOVE TO BE OF 1 HOUR CONSTRUCTION WITH 5/8" TYPE 'X' GYPSUM BOARD MINIMUM. DOORS FROM GARAGE TO LIVING AREA TO BE 1-3/8" MIN. SOLID WOOD DOOR OR 20-MINUTE FIRE-RATED WITH SELF-CLOSING AND SELF-LATCHING DEVICE AND WEATHER STRIPPING. PROVIDE 1/2" GYPSUM BOARD ON ALL WALLS & STRUCTURES (BEAMS, POSTS, ETC.) AT GARAGE SIDE OF THE WALL SUPPORTING 5/8" TYPE 'X' GYPSUM BOARD.
7. USABLE SPACE UNDER STAIRS AT R2 AND R3 TO BE 1/2" GYPSUM BOARD MIN. AT ALL WALLS AND CEILING PER CRC.
8. PROVIDE 6" MINIMUM CLEARANCE AT BACK OF FURNACE AND 12" TOTAL CLEARANCE ON SIDES OF FURNACE.
9. INSTALL ZERO CLEARANCE PRE-FAB FIREPLACES AS DIRECTED BY THE MANUFACTURERS INSTALLATION RECOMMENDATIONS AND ITS LISTING PER CRC. VERIFY HEARTH EXTENSION MATERIAL AND THICKNESS MEET MANUFACTURERS SPECIFICATIONS. FIRE STOPS WITH NON-COMBUSTIBLE MATERIALS SHALL BE PROVIDED AROUND THE CHIMNEY IN OPENINGS AT THE CEILING PER CRC.
10. TOP OF FIREPLACE CHIMNEYS TO EXTEND 2 FEET MIN. ABOVE ANY ROOFING MATERIAL WITHIN 10 FEET (MEASURED HORIZONTALLY) OF CHIMNEY AND 3 FEET MIN. ABOVE ANY ADJACENT ROOFING MATERIAL. CRC R1003.

GLAZING

11. ALL GLASS AND GLAZING SHALL COMPLY WITH THE U.S. SAFETY STANDARDS FOR ARCHITECTURAL GLAZING MATERIALS, AND WITH FEDERAL SPECIFICATIONS.
12. VERIFY WINDOWS MEET EGRESS REQUIREMENTS (CRC R310). AT LEAST ONE ESCAPE ROUTE FROM EACH SLEEPING ROOM, 20" CLEAR WIDTH, 24" CLEAR HEIGHT, AND 5.7 SQ. FT. CLEAR OPENING, THE BOTTOM OF THE CLEAR OPENING NOT GREATER THAN 44" ABOVE THE FLOOR (CRC).
13. SKYLIGHT DESIGN TO CARRY ALL TRIBUTARY ROOF LOADS AS SPECIFIED IN CRC R301.
14. CONSTRUCTION OF SKYLIGHT GLAZING SYSTEM TO MEET REQUIREMENTS OF CRC R308.6.
15. GLASS SHOWER AND TUB ENCLOSURES, AND WINDOWS OVER SHOWERS AND TUBS TO BE SAFETY GLASS. CRC R308.4.5.
16. GLAZING IN ANY DOOR, OR GLAZING WITHIN 24" OF ANY DOOR AND WITHIN 60" OF FLOORS TO BE TEMPERED GLASS CRC R308.4.1 AND R308.4.2. GLAZING WITHIN 18" OF THE FLOOR AS PER CRC R308.4.3 OR AT ENCLOSED WALLS AT STAIRWAYS AS PER CRC R308.4.6 AND R308.4.7 TO BE TEMPERED GLASS.

STAIRS

17. RISERS ON STAIRWAYS SHALL NOT BE LESS THAN 4", NOR GREATER THAN 7-3/4". THE GREATEST RISER HEIGHT SHALL NOT EXCEED THE SMALLEST BY MORE THAN 3/8". THE RUN SHALL NOT BE LESS THAN 10". THE LARGEST RUN SHALL NOT EXCEED THE SMALLEST BY MORE THAN 3/8". CRC R311.7.5. HEADROOM AT STAIRWAYS TO BE 6'-8" MIN., MEASURED VERTICALLY AT ALL POINTS FORMED BY A PLANE TANGENT TO ALL TREAD NOSINGS. CRC R311.7.2. NOSING DIMENSION AND PROFILE PER CRC R311.7.5.3. 18.
18. GUARDRAILSSHALL HAVE MINIMUM OF 42" IN HEIGHT. CRC R312.1.2. OPEN GUARDS SHALL HAVE BALUSTERS SUCH THAT 4" DIAMETER SHPERE CANNOT PASS THROUGH. CRC R312.1.3. FOR R2 AND R3 OCCUPANCY, OPENINGS FOR REQUIRED GUARDS ON THE SIDES OF STAIR TREADS SHALL NOT ALLOW PASSAGE OF A SPHERE OF 4-3/8" OR MORE IN DIAMETER. CRC R312.1.3 EX. 2.
19. HANDRAILS TO BE 34" TO 38" ABOVE TREAD NOSING, CIRCULAR HANDGRIP TO BE MIN. 1-1/4" TO MAX. 2" IN CROSS SECTION. HANDRAILS SHALL BE PROVIDED ON AT LEAST ONE SIDE OF EACH CONTINUOUS RUN OF THREADS OF FLIGHT WITH FOUR RISERS OR MORE. CRC R311.7.8.

BATHROOMS

20. TOILETS TO HAVE A MINIMUM CLEAR STALL SPACE OF 30" AND A MINIMUM CLEAR SPACE OF 24" IN FRONT. INSTALL MAX. 1.28 GALLON PER FLUSH TOILETS.
21. SHOWERS TO HAVE A MINIMUM AREA OF 1024 SQ. IN. AND A MINIMUM CLEAR HORIZONTAL DIMENSION OF 30", MEASURED AT THE TOP OF THE CURB. WALLS SHALL BE CEMENT-BASED BACKER BOARDS TO A MIN. HEIGHT OF 72" ABOVE THE DRAIN INLET. CRC R307.2. PROVIDE INDIVIDUAL PRESSURE BALANCE OR TEMPERATURE CONTROL AT EACH SHOWER OR TUB/SHOWER.
22. INSTALL TUB WITH FULL MORTAR SET TILE SURROUND. WALLS SHALL BE CEMENT-BASED BACKER BOARDS TO THE CEILING AT SHOWERS AND TUB/SHOWERS.

GENERAL

23. VAULTED CEILINGS SHALL BE PROVIDED WITH A VAPOR BARRIER BENEATH THE INSULATION AND A 1" MIN. AIR SPACE ABOVE THE INSULATION. THE AIR SPACE SHALL BE VENTILATED AS PER CRC R806.
24. FURNACES AND WATER HEATERS IN GARAGES SHALL BE MOUNTED UPON PLATFORMS NOT LESS THAN 18" ABOVE THE GARAGE FLOOR.
25. WATER HEATER SHALL BE STRAPPED FOR SEISMIC LOAD AT POINTS BETWEEN THE UPPER ONE THIRD AND LOWER ONE THIRD OF ITS HEIGHT. THE LOWERS STRAP SHALL BE A MINIMUM OF 4 INCHES ABOVE THE WATER HEATER CONTROLS. SEE CPC.
26. PROVIDE ROOF DRAINS AND OVERFLOW DRAINS AT FLAT ROOFS AS PER CRC R903.4 AND CPC.

PERFORMANCE

27. PROVIDE FABRICATOR'S CERTIFICATE FOR GLU-LAM BEAMS TO BUILDING DEPARTMENT FOR REVIEW AND APPROVAL AT TIME OF DELIVERY AND PRIOR TO INSTALLATION AS PER CBC.
28. ALL HARDWOOD FLOORING TO BE INSTALLED IN ACCORDANCE WITH THE LATEST NOFMA SPECIFICATIONS AND RECOMMENDATIONS.
29. ALL TILE WORK TO BE INSTALLED IN ACCORDANCE WITH THE LATEST TILE COUNCIL OF AMERICA SPECIFICATIONS AND RECOMMENDATIONS.
30. ALL PLUMBING WORK SHALL COMPLY WITH THE CALIFORNIA PLUMBING CODE, SAFETY ORDERS OF THE STATE OF CALIFORNIA AND ALL LOCAL CODES AND ORDINANCES.
31. ALL H.V.A.C. WORK SHALL BE IN CONFORMANCE WITH APPLICABLE CODES, THE CALIFORNIA MECHANICAL CODE, AND THE RECOMMENDED PRACTICES OF ASHRAE AND SMACNA.
32. ALL ELECTRICAL WORK SHALL CONFORM TO THE CALIFORNIAL ELECTRICAL CODE AND ALL OTHER APPLICABLE CODES AND REQUIREMENTS. TOXIC MATERIALS REMOVAL

TOXIC MATERIALS REMOVAL

33. ALL HANDLING AND REMOVAL OF TOXIC MATERIALS TO BE DONE BY A CERTIFIED TOXIC WASTE CONTRACTOR. CERTIFICATION TO BE DONE BY THE STATE OF CALIFORNIA AND REGISTERED WITH THE LOCAL BUILDING OFFICIAL.
34. FOR ALL NEW CONSTRUCTION, ALL DWELLINGS SHALL COMPLY WITH THE 2013 CALIFORNIA GREEN BUILDING STANDARDS CODE. BUILDINGS SHALL BE DESIGNER TO INCLUDE THE GREEN BUILDING MEASURED SPECIFIED AS MANDATORY IN THIS CODE. FOR SITE DEVELOPMENT PER CGBSC SECTION 4.106, FOR WATER EFFICIENCY AND CONSERVATION PER CGBSC SECTION 4.301, FOR INDOOR AIR QUALITY PER CGBSC SECTION 5.506

CORRECTION NOTES:
** LOTS SHALL BE GRADED TO DRAIN SURFACE WATER AWAY FROM FOUNDATION WALLS. THE GRADE SHALL FALL A MINIMUM OF 6 INCHES WITHIN THE FIRST 10 FEET. [R401.3] IMPERVIOUS SURFACES WITHIN 10 FEET OF THE BUILDING FOUNDATION SHALL BE SLOPED NOT LESS THAN 2 PERCENT AWAY FROM THE BUILDING. [R401.3, EXCEPTION]

1

** ALL LANDSCAPING IS EXISTING AND TO REMAIN UNAFFECTED

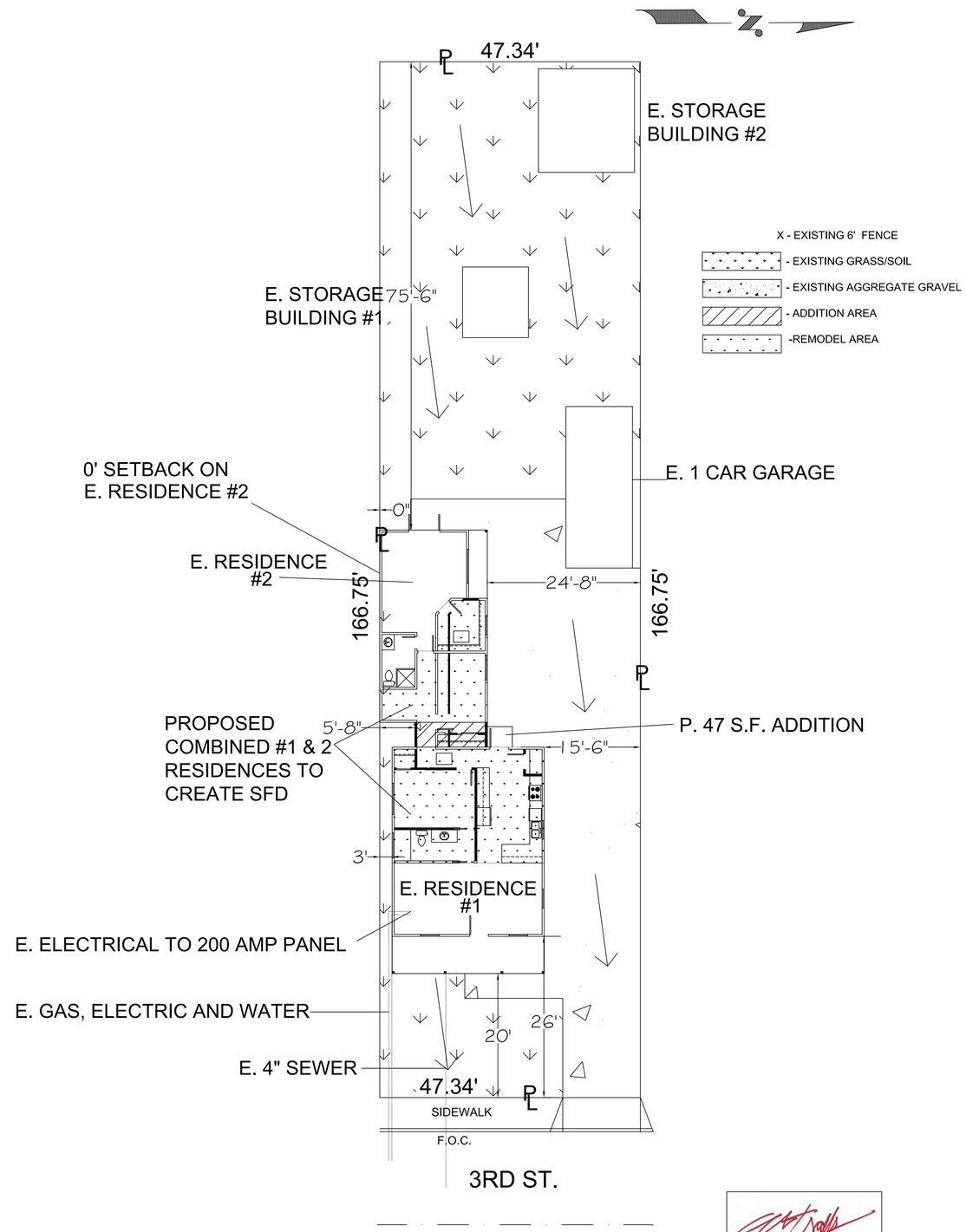

REVISIONS

1	
2	
3	
4	
5	
6	
7	
8	

SOUTH BAY DESIGN

SOUTH BAY DESIGN
DBA
ALEX VALLES
PRINCIPAL/OWNER
P.O. BOX 339
SAN JUAN BAUTISTA, CA 95045
831.207.9677
sbdesign27@yahoo.com

ADDITION/REMODEL
JIMENEZ FAMILY
701 3RD ST.
SAN JUAN BAUTISTA, CA 95045

SITE PLAN

DRAWN BY A.V.
CHECKED
DATE 10.14.22
SCALE 1" = 10'-0"
JOB NO.
SHEET A1

ELECTRICAL

	SMOKE DETECTOR
CM	CARBON MONOXIDE DETECTOR
E	E. 200 AMP ELECTRICAL PANEL

WALL LEGEND	
(E) EXISTING WALL TO REMAIN -	
(E) WALL TO BE DEMO'D -	

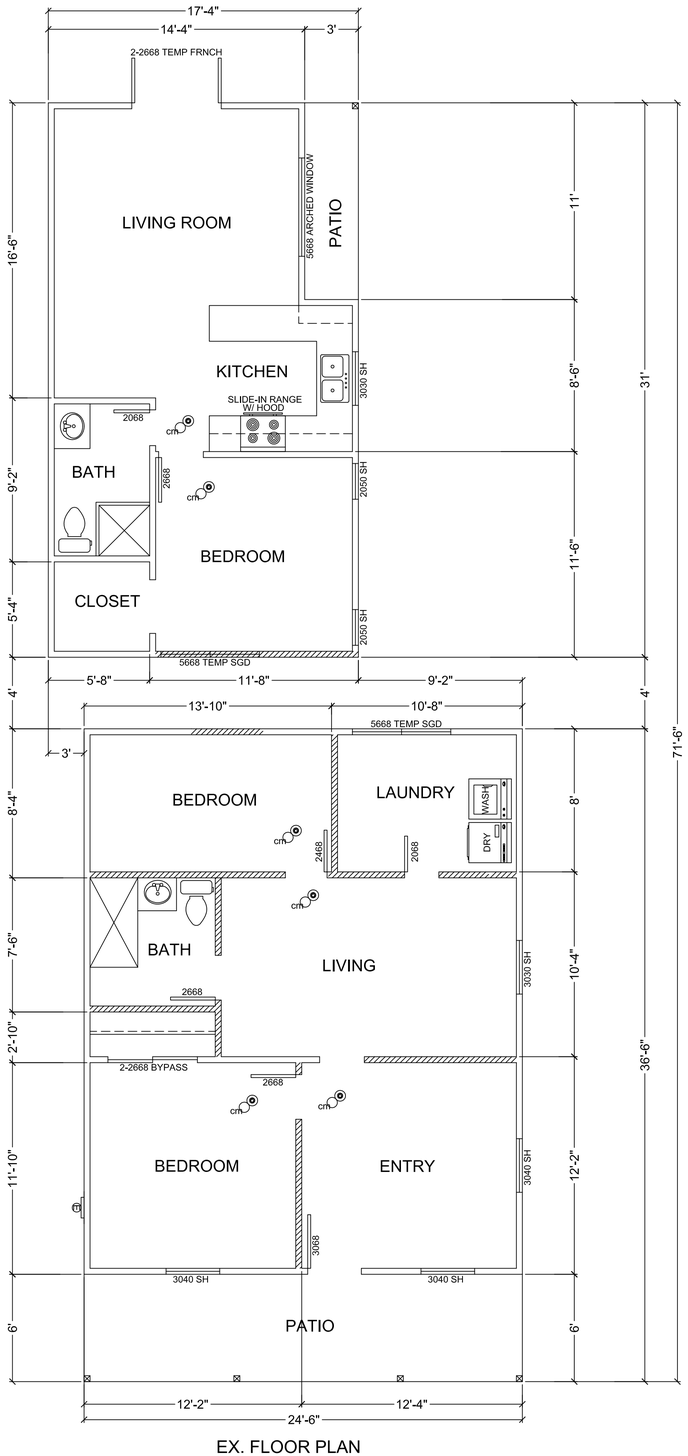

EX. FLOOR PLAN

EX. FRONT HOUSE LIVING: 747 S.F.
EX. REAR HOUSE LIVING: 504 S.F.
TOTAL LIVING:1,251 S.F.
EXISTING PORCHES: 180 S.F.

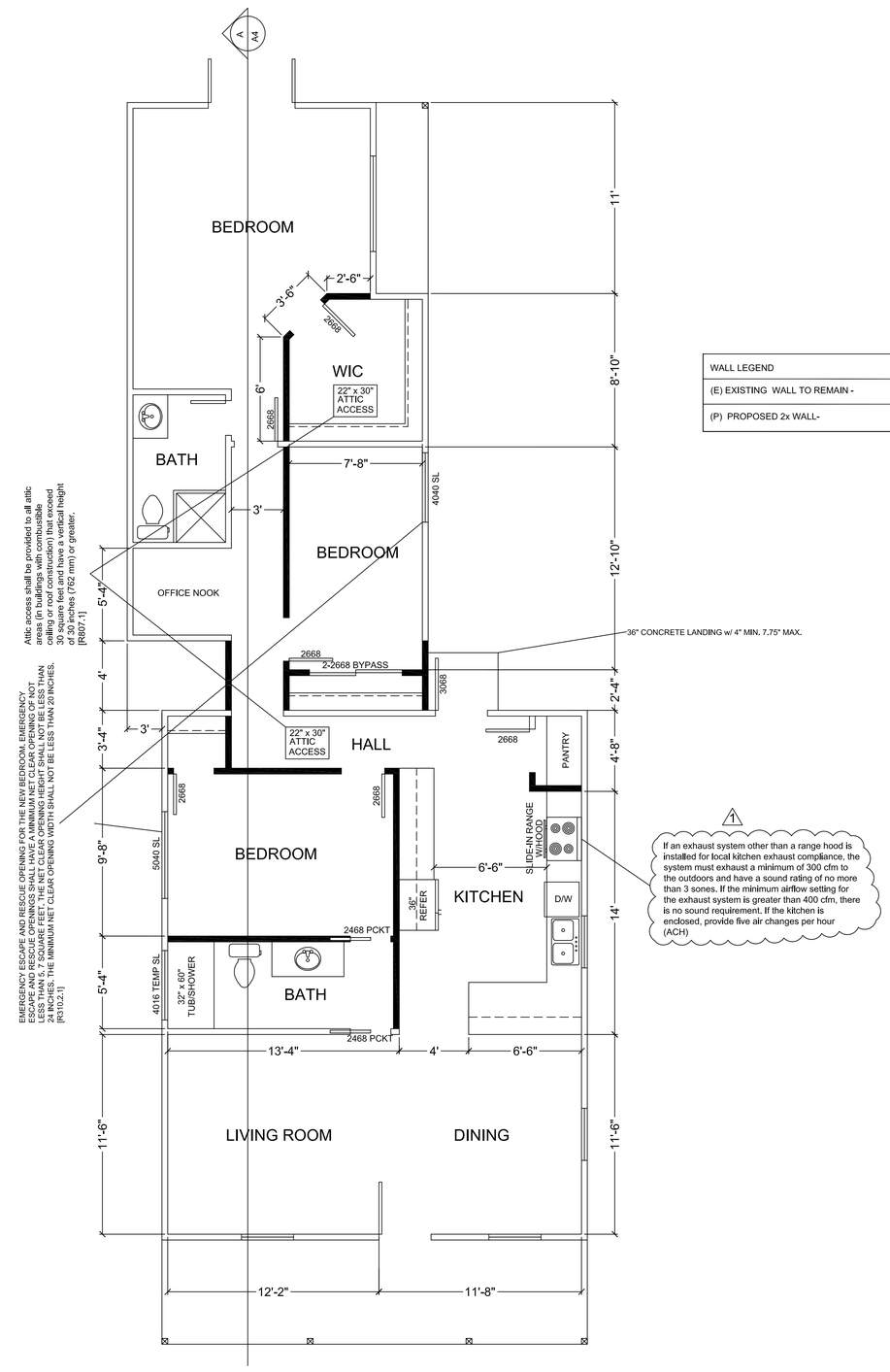

WALL LEGEND	
(E) EXISTING WALL TO REMAIN -	
(P) PROPOSED 2x WALL-	

PR. FLOOR PLAN

EX. FRONT HOUSE LIVING: 747 S.F.
EX. REAR HOUSE LIVING: 504 S.F.
TOTAL LIVING:1,251 S.F.
EXISTING PORCHES: 180 S.F.

ADDITION:47 S.F.
TOTAL PROPOSED LIVING S.F.: 1,298 S.F.

REVISIONS

1	
2	
3	
4	
5	
6	
7	
8	

SOUTH BAY DESIGN
DBA
ALEX VALLES
PRINCIPAL/OWNER
P.O. BOX 339
SAN JUAN BAUTISTA, CA 95045
831.207.9677
sbdesign27@yahoo.com

ADDITION/REMODEL
JIMENEZ FAMILY
701 3RD ST.
SAN JUAN BAUTISTA, CA 95045

E./P. FLOOR PLAN

DRAWN BY	A.V.
CHECKED	
DATE	10.14.22
SCALE	1/4" = 1'-0"
JOB NO.	
SHEET	A2

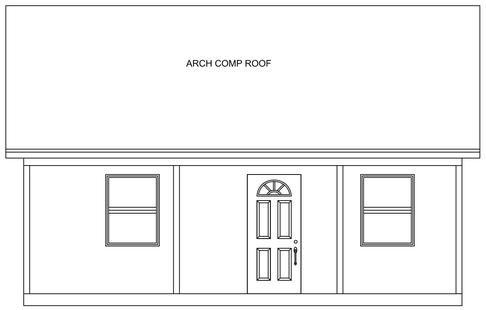

EX. FRONT ELEVATION

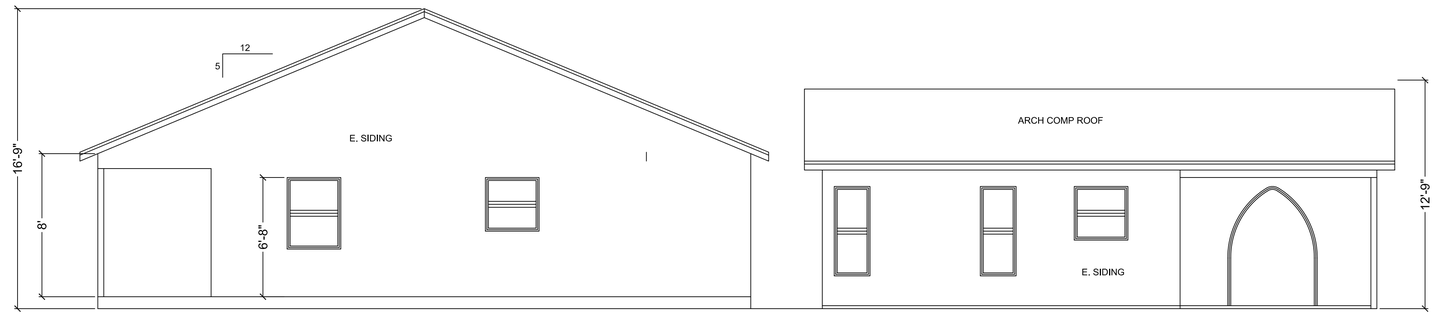

EX. RIGHT ELEVATION

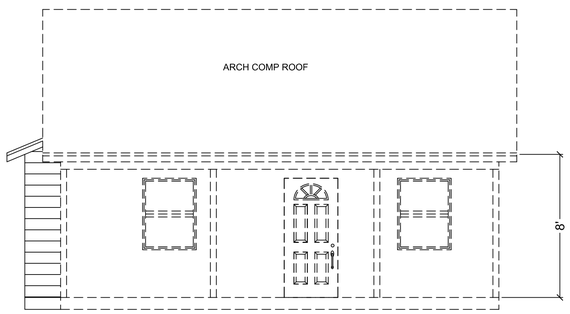

PR. FRONT ELEVATION

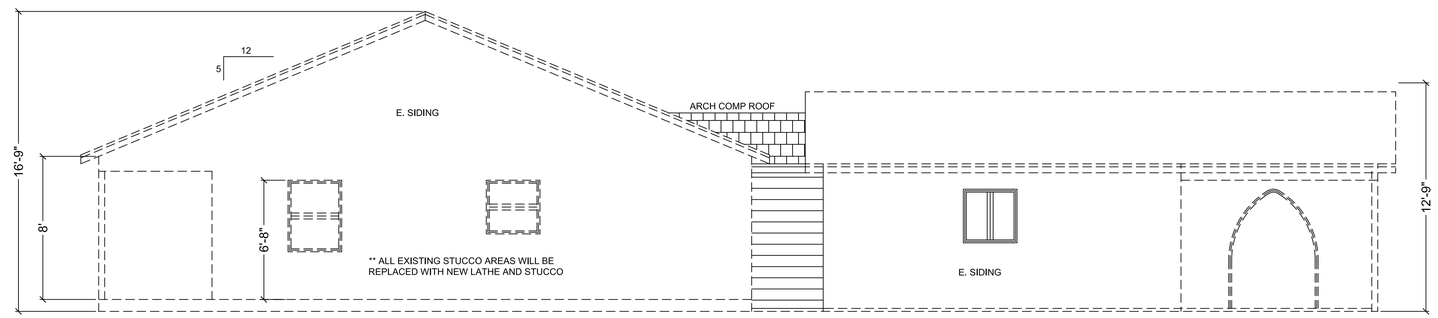

PR. RIGHT ELEVATION

WALL LEGEND	
(E) WALL/ELEMENT -	
(P) WALL/ELEMENT -	

** FLASHINGS SHALL BE INSTALLED AT WALL AND ROOF INTERSECTIONS, WHEREVER THERE IS A CHANGE IN ROOF SLOPE OR DIRECTION AND AROUND ROOF OPENINGS. A FLASHING SHALL BE INSTALLED TO DIVERT THE WATER AWAY FROM WHERE THE EAVE OF A SLOPED ROOF INTERSECTS A VERTICAL SIDEWALL. [R903.2.1]
** FENESTRATIONS, INCLUDING SKYLIGHT PRODUCTS, MUST HAVE A MAXIMUM LI-FACTOR OF 0.58. [CENC 150.0(Q)1]
** IN BATHROOMS, CONTROL VALVES AND SHOWERHEADS SHALL BE LOCATED ON THE SIDEWALL OF SHOWER COMPARTMENTS OR OTHERWISE ARRANGED SO THAT THE SHOWERHEADS DOES NOT DISCHARGE DIRECTLY AT THE ENTRANCE TO THE COMPARTMENT SO THAT THE BATHER CAN ADJUST THE VALVES PRIOR TO STEPPING INTO THE SPRAY. 408.9 (2019 CPC)

** A MINIMUM 0.019-INCH (NO. 26 GALVANIZED SHEET GAGE), CORROSION-RESISTANT WEEP SCREED OR PLASTIC WEEP SCREED, WITH A MINIMUM VERTICAL ATTACHMENT FLANGE OF 3½" SHALL BE PROVIDED AT OR BELOW THE FOUNDATION PLATE LINE ON EXTERIOR STUD WALLS. THE WEEP SCREED SHALL BE PLACED A MINIMUM OF 4 INCHES ABOVE THE EARTH OR 2 INCHES ABOVE PAVED AREAS AND SHALL BE OF A TYPE THAT WILL ALLOW TRAPPED WATER TO DRAIN TO THE EXTERIOR OF THE BUILDING. THE WEATHER-RESISTANT BARRIER SHALL LAP THE ATTACHMENT FLANGE. THE EXTERIOR LATH SHALL COVER AND TERMINATE ON THE ATTACHMENT FLANGE OF THE WEEP SCREED. [R703. 7 .2.1]

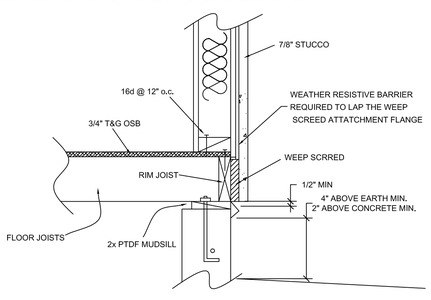

WEEP SCREED
RAISED FOUNDATION
NOT TO SCALE

ATTIC VENT CALCS

1,251 SQ. FT. $\frac{1}{150}$ = 8.34

8.34 x 144 = 1,201 SQ INCHES OF NET FREE VENTILATION AREA

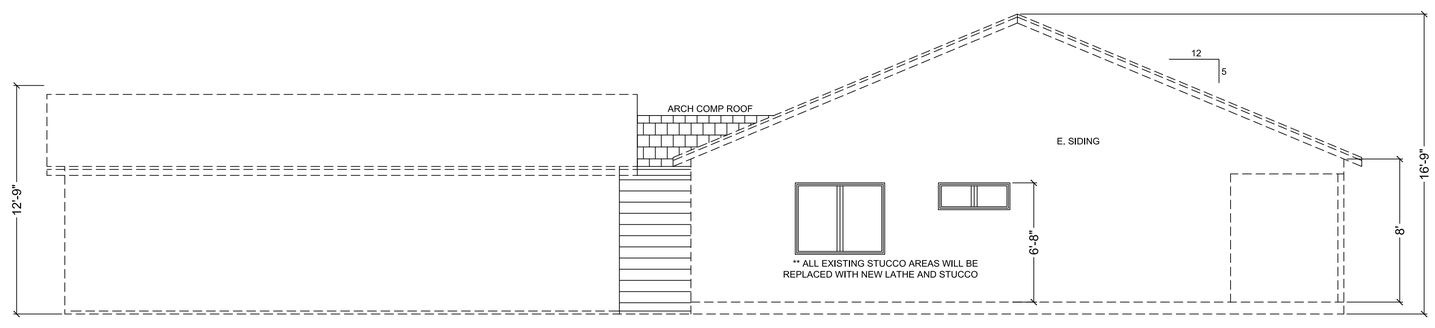

PR. LEFT ELEVATION

REVISIONS

1	
2	
3	
4	
5	
6	
7	
8	

SOUTH BAY DESIGN
DBA
ALEX VALLES
PRINCIPAL/OWNER
P.O. BOX 339
SAN JUAN BAUTISTA, CA 95045
831.207.9677
sbdesign27@yahoo.com

ADDITION/REMODEL
JIMENEZ FAMILY
701 3RD ST.
SAN JUAN BAUTISTA, CA 95045

E./P. ELEVATIONS

DRAWN BY
A.V.
CHECKED
DATE
10.14.22
SCALE
1/4" = 1'-0"
JOB NO.
SHEET
A3

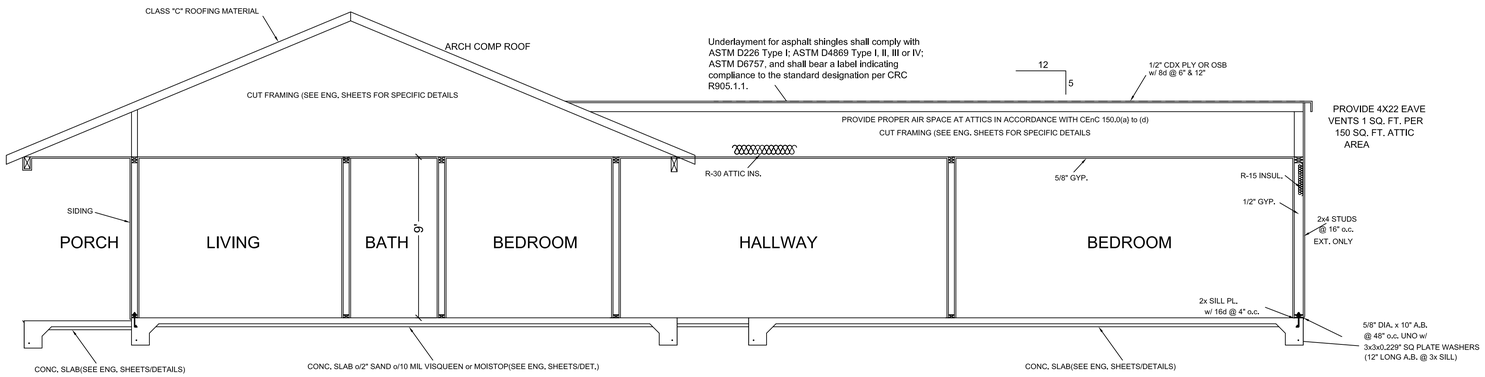

SECTION A

** ALL 125-VOLT, SINGLE-PHASE, 15- AND 20-AMPERE RECEPTACLES INSTALLED IN THE LOCATIONS SPECIFIED IN 210.8(A)(1) THROUGH (8) SHALL HAVE GROUND-FAULT CIRCUIT INTERRUPTER (GFCI) PROTECTION FOR PERSONNEL. [CEC 210.8(A)]
(1) BATHROOMS
(2) GARAGES AND ACCESSORY BUILDINGS THAT HAVE A FLOOR LOCATED AT OR BELOW GRADE LEVEL NOT INTENDED AS HABITABLE ROOMS AND LIMITED TO STORAGE AREAS, WORK AREAS, AND AREAS OF SIMILAR USE
(3) OUTDOORS
(4) CRAWL SPACES - AT OR BELOW GRADE LEVEL
(5) UNFINISHED BASEMENTS -FOR PURPOSES OF THIS SECTION, UNFINISHED BASEMENTS ARE DEFINED AS PORTIONS OR AREAS OF THE BASEMENT NOT INTENDED AS HABITABLE ROOMS AND LIMITED TO STORAGE AREAS, WORK AREAS, AND THE LIKE.
(6) KITCHENS- WHERE THE RECEPTACLES ARE INSTALLED TO SERVE THE COUNTERTOP SURFACES.
(7) SINKS - WHERE RECEPTACLES ARE INSTALLED WITHIN 6-FT OF THE TOP INSIDE EDGE OF THE BOWL OF THE SINK.
(8) BATHTUBS OR SHOWER STALLS - WHERE RECEPTACLES ARE INSTALLED WITHIN 6-FT OF THE OUTSIDE EDGE OF THE BATHTUB OR SHOWER STALL.
(9) LAUNDRY AREAS.
** GFCI PROTECTION SHALL BE PROVIDED FOR OUTLETS THAT SUPPLY DISHWASHERS LOCATED IN DWELLING UNITS. [CEC 210.8(D)]
** ALL LIGHTS THROUGHOUT THE RESIDENCE, INCLUDING THE GARAGE AND EXTERIOR, SHALL BE HIGH EFFICACY. [CENC 150.0(K)1A]
** AT LEAST ONE LIGHT FIXTURE IN BATHROOMS, GARAGES, LAUNDRY ROOMS, AND UTILITY ROOMS SHALL BE CONTROLLED BY A VACANCY SENSOR. [CENC 150.0(K)21]
** OUTDOOR LIGHTS MUST BE HIGH EFFICACY AND CONTROLLED BY AN ASTRONOMICAL TIME CLOCK OR BY BOTH A MOTION SENSOR AND PHOTOCELL. [CENC 150.0(K)(3)]
** ALL RECESSED LIGHTS MUST BE ON A DIMMER OR VACANCY SENSOR AND COMPLY WITH JAS-2016-E OR JAB-2019-E. [CENC TABLE 150.0-A #7]

1

** ALL NEW 15- AND 20-AMPERE, 125-AND 250-VOLT NONLOCKING-TYPE RECEPTACLES SHALL BE LISTED TAMPER-RESISTANT RECEPTACLES." [CEC 4016.12]
** TWO OR MORE 20-AMPERE SMALL-APPLIANCE BRANCH CIRCUITS SHALL BE PROVIDED FOR ALL RECEPTACLE OUTLETS SPECIFIED BY 210.52(B). [CEC 210.11(C)1]
** AT LEAST ONE 120-VOLT, 20-AMPERE BRANCH CIRCUIT SHALL BE PROVIDED TO SUPPLY THE BATHROOM(S) RECEPTACLE OUTLET(S). SUCH CIRCUITS SHALL HAVE NO OTHER OUTLETS. [CEC 210.11 (C)3]
** NOTE THAT ALL NEWLY INSTALLED LUMINARIES SHALL BE HIGH EFFICIENCY. [CA ENERGY 150.0(K)1.A]

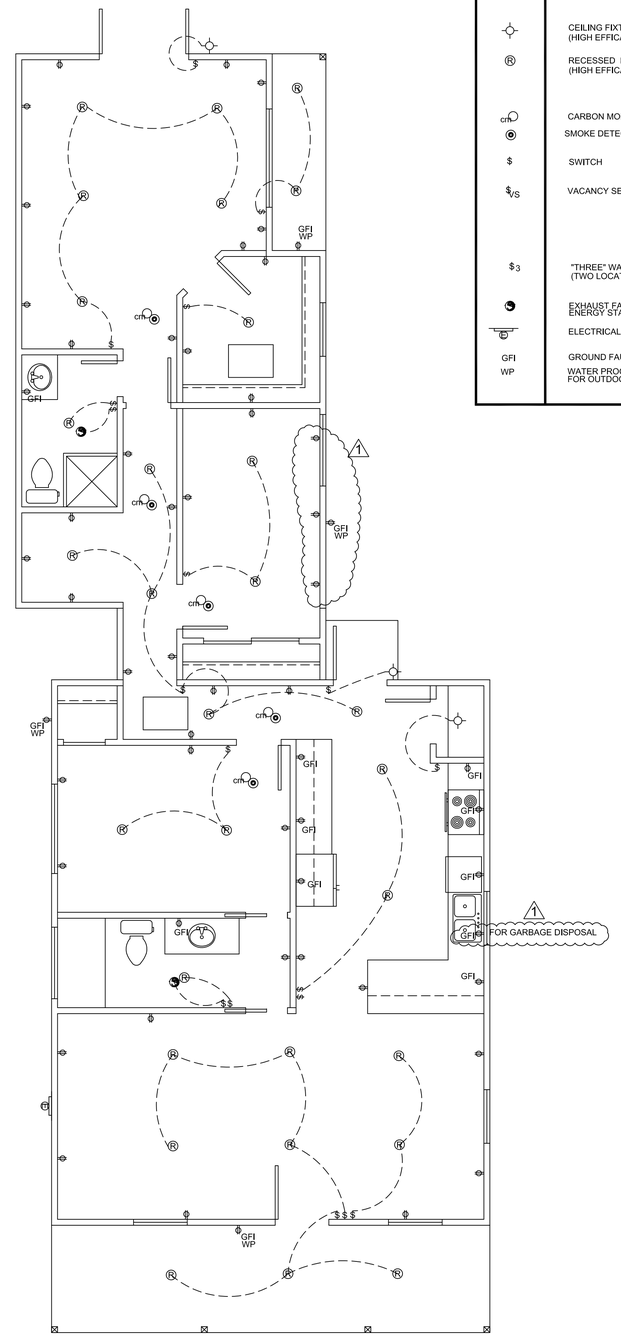

ELECTRICAL PLAN

ELECTRICAL/PLUMBING

	DUPLEX RECEPTACLE (all outlets AFCI unless noted as GFCI)
	CEILING FIXTURE (HIGH EFFICACY)
R	RECESSED FIXTURE (HIGH EFFICACY)
CM	CARBON MONOXIDE DETECTOR
	SMOKE DETECTOR
$	SWITCH
$VS	VACANCY SENSOR SWITCH
$3	"THREE" WAY SWITCH (TWO LOCATIONS)
	EXHAUST FAN 75 CFM W/ HUMIDISTAT ENERGY STAR RATED
	ELECTRICAL PANEL
GFI	GROUND FAULT INTERRUPTOR
WP	WATER PROOF; BUBBLE COVER FOR OUTDOOR RECEPTACLES

REVISIONS

1	3.30.23
2	
3	
4	
5	
6	
7	
8	

SOUTH BAY DESIGN
DBA
ALEX VALLES
PRINCIPAL/OWNER
P.O. BOX 339
SAN JUAN BAUTISTA, CA 95045
831.207.9677
sbdesign27@yahoo.com

ADDITION/REMODEL
JIMENEZ FAMILY
701 3RD ST.
SAN JUAN BAUTISTA, CA 95045

ELECTRICAL PLAN / SECTIONS

DRAWN BY A.V.
CHECKED
DATE 10.14.22
SCALE 1/4" = 1'-0"
JOB NO.
SHEET A4

FASTENING SCHEDULE CBC 2019 TABLE 2304.10.1

CONNECTION	FASTENING	LOCATION
1. JOIST TO SILL OR GIRDER	3 - 8d COMMON (2 ½" x 0.131") 3 - 3" x 0.131" NAILS 3 - 3" 14 GAGE STAPLES	TOENAIL
2. BRIDGING TO JOIST	2 - 8d COMMON (2 ½" x 0.131") 2 - 3" x 0.131" NAILS 2 - 3" 14 GAGE STAPLES	TOENAIL EACH END
3. 1" x 6" SUBFLOOR OR LESS TO EACH JOIST	2 - 8d COMMON (2 ½" x 0.131")	FACE NAIL
4. WIDER THAN 1"x6" SUBFLOOR TO EACH JOIST	3 - 8d COMMON (2 ½" x 0.131")	FACE NAIL
5. 2" SUBFLOOR TO JOIST OR GIRDER	2 - 16d COMMON (3 ½" x 0.162")	BLIND AND FACE NAIL
6. SOLE PLATE TO JOIST OR BLOCKING	16d (3 ½" x 0.135") AT 16" O.C. 3" x 0.131" NAILS AT 8" O.C. 3" 14 GAGE STAPLES AT 12" O.C.	TYPICAL FACE NAIL
SOLE PLATE TO JOIST OR BLOCKING AT BRACED WALL PANEL	3 - 16d (3½" x 0.135") AT 16" O.C. 4 - 3" x 0.131" NAILS AT 16" O.C. 4 - 3" x 14 GAGE STAPLES AT 16" O.C.	BRACED WALL PANELS
7. TOP PLATE TO STUD	2 - 16d COMMON (3 ½" x 0.162") 3 - 3" x 0.131" NAILS 3 - 3" 14 GAGE STAPLES	END NAIL
8. STUD TO SOLE PLATE	4 - 8d COMMON (2½" x 0.131") 4 - 3" x 0.131" NAILS 3 - 3" 14 GAGE STAPLES	TOENAIL
	2 - 16d COMMON (3½" x 0.162") 3 - 3" x 0.131" NAILS 3 - 3" x 14 GAGE STAPLES	END NAIL
9. DOUBLE STUDS	16d (3½" x 0.135") AT 24" O.C. 3" x 0.131" NAILS AT 8" O.C. 3" 14 GAGE STAPLES AT 8" O.C.	FACE NAIL
10. DOUBLE TOP PLATES	16d (3½" x 0.135") AT 16" O.C. 3" x 0.131" NAILS AT 12" O.C. 3" 14 GAGE STAPLES AT 12" O.C.	TYPICAL FACE NAIL
DOUBLE TOP PLATES	8 - 16d COMMON (3½" x 0.162") 12 - 3" x 0.131" NAILS 12 - 3" x 14 GAGE STAPLES	LAP SPLICE
11. BLOCKING BETWEEN JOISTS OR RAFTERS TO TOP PLATE	3 - 8d COMMON (2½" x 0.131") 3 - 3" x 0.131" NAILS AT 6" O.C. 3" 14 GAGE STAPLES AT 6" O.C.	TOENAIL
12. RIM JOIST TO TOP PLATE	8d (2½" x 0.131") AT 6" O.C. 3" x 0.131" NAILS AT 6" O.C. 3" 14 GAGE STAPLES AT 6" O.C.	TOENAIL
13. TOP PLATES, LAPS, AND INTERSECTIONS	2 - 16d COMMON (3½" x 0.162") 3 - 3" x 0.131" NAILS 3" 14 GAGE STAPLES	FACE NAIL
14. CONTINUOUS HEADER, TWO PIECES	16d COMMON (3½" x 0.162")	16" O.C. ALONG EDGE
15. CEILING JOISTS TO PLATE	3 - 8d COMMON (2½" x 0.131") 5 - 3" x 0.131" NAILS 5 - 3" 14 GAGE STAPLES	FACE NAIL
16. CONTINUOUS HEADER TO STUD	4 - 8d COMMON (2½" x 0.131")	TOENAIL
17. CEILING JOISTS, LAPS OVER PARTITIONS (SEE SECTION 2308.10.4.1, TABLE 2308.10.4.1)	3 - 16d COMMON (3½" x 0.162") MINIMUM, TABLE 2308.10.4.1 4 - 3" x 0.131" NAILS 4 - 3" 14 GAGE STAPLES	FACE NAIL
18. CEILING JOISTS TO PARALLEL RAFTERS (SEE SECTION 2308.10.4.1, TABLE 2308.10.4.1)	3 - 16d COMMON (3½" x 0.162") MINIMUM, TABLE 2308.10.4.1 4 - 3" x 0.131" NAILS 4 - 3" 14 GAGE STAPLES	FACE NAIL
19. RAFTER TO PLATE (SEE SECTION 2308.10.4.1, TABLE 2308.10.4.1)	3 - 8d COMMON (3½" x 0.131") 3 - 3" x 0.131" NAILS 3 - 3" 14 GAGE STAPLES	TOENAIL
20. 1" DIAGONAL BRACE TO EACH STUD AND PLATE	2 - 8d COMMON (2½" x 0.131") 2 - 3" x 0.131" NAILS 3 - 3" 14 GAGE STAPLES	FACE NAIL
21. 1" x 8" SHEATHING TO EACH BEARING	3 - 8d COMMON (2½" x 0.131")	FACE NAIL
22. WIDER THAN 1" x 8" SHEATHING TO EACH BEARING	3 - 8d COMMON (2½" x 0.131")	FACE NAIL
23. BUILT-UP CORNER STUDS	16d COMMON (3½" x 0.162") 3" x 0.131" NAILS 3" 14 GAGE STAPLES	24" O.C. 16" O.C. 16" O.C.
24. BUILT-UP GIRDER AND BEAMS	20d COMMON (4" x 0.192") AT 32" O.C. 3" x 0.131" NAILS AT 24" O.C. 3" 14 GAGE STAPLES AT 24" O.C.	FACE NAIL AT TOP AND BOTTOM STAGGERED ON OPPOSITE SIDES
	2 - 20d COMMON (4" x 0.192") 3 - 3" x 0.131" NAILS 3 - 3" x 14 GAGE STAPLES	FACE NAIL AT ENDS AND AT EACH SPLICE
25. 2" PLANKS	16d COMMON (3½" x 0.162")	AT EACH BEARING
26. COLLAR TIE TO RAFTER	3 - 10d COMMON (3" x 0.148") 4 - 3" x 0.131" NAILS 4 - 3" 14 GAGE STAPLES	FACE NAIL

FASTENING SCHEDULE CBC 2019 TABLE 2304.10.1 (CONT.)

CONNECTION	FASTENING	LOCATION
27. JACK RAFTER TO HIP	3 - 10d COMMON (3" x 0.148") 4 - 3" x 0.131" NAILS 4 - 3" 14 GAGE STAPLES	TOENAIL
	3 - 10d COMMON (3" x 0.148") 4 - 3" x 0.131" NAILS 4 - 3" x 14 GAGE STAPLES	FACE NAIL
28. ROOF RAFTER TO 2-BY RIDGE BEAM	2 - 16d COMMON (3½" x 0.162") 3 - 3" x 0.131" NAILS 3 - 3" 14 GAGE STAPLES	TOENAIL
	2 - 16d COMMON (3½" x 0.162") 3 - 3" x 0.131" NAILS 3 - 3" x 14 GAGE STAPLES	FACE NAIL
29. JOIST TO BAND JOIST	3 - 16d COMMON (3½" x 0.162") 4 - 3" x 0.131" NAILS 4 - 3" 14 GAGE STAPLES	FACE NAIL
30. LEDGER STRIP	3 - 16d COMMON (3½" x 0.162") 4 - 3" x 0.131" NAILS 4 - 3" 14 GAGE STAPLES	FACE NAIL AT EACH JOIST
31. WOOD STRUCTURAL PANELS AND PARTICLEBOARD[a] SUBFLOOR, ROOF, AND WALL SHEATHING (TO FRAMING)	½" AND LESS: 6d[c,1]; 2⅜" x 0.113" NAIL[d]; 1¾" 16 GAGE[c] 19/32" TO ¾": 8d OR 6d[c]; 2⅜" x 0.113" NAIL[d]; 2" 16 GAGE[c] ⅞" TO 1": 8d[c] 1⅛" TO 1¼": 10d[e] OR 8d[c]	
SINGLE FLOOR (COMBINATION SUBFLOOR-UNDERLAYMENT TO FRAMING)	¾" AND LESS: 6d[e] ⅞" TO 1": 8d[e] 1⅛" TO 1¼": 10d[e] OR 8d[e]	
32. PANEL SIDING (TO FRAMING)	½" OR LESS: 6d[f] ⅝": 8d[f]	
33. FIBERBOARD SHEATHING[g]	½": NO. 11 GAGE ROOFING NAIL[h]; 6d COMMON NAIL (2" x 0.113"); NO. 16 GAGE STAPLE[g] 25/32": NO. 11 GAGE ROOFING NAIL[h]; 8d COMMON NAIL (2½" x 0.113"); NO. 16 GAGE STAPLE[i]	
34. INTERIOR PANELING	¼": 4d[j] ⅜": 6d[k]	

FOR SI: 1 INCH = 25.4MM.

a. COMMON BOX NAILS A RE PERMITTED TO BE USED EXCEPT WHERE OTHERWISE STATED.
b. NAILS SPACED AT 6 INCHES ON CENTER AT EDGES, 12 INCHES AT INTERMEDIATE SUPPORTS EXCEPT 6 INCHES AT SUPPORTS WHERE SPANS ARE 48 INCHES OR MORE. FOR NAILING OF WOOD STRUCTURAL PANEL AND PARTICLEBOARD DIAPHRAGMS AND SHEAR WALLS, REFER TO SECTION 2305. NAILS FOR WALL SHEATHING ARE PERMITTED TO BE COMMON, BOX OR CASING.
c. COMMON OR DEFORMED SHANK (6d -2" x 0.113"; 8d - 2 ½" x 0.131": 10d - 3" x 0.148")
d. COMMON (6d - 2" x 0.113"; 8d - 2⅜" x 0.131": 10d - 3" x 0.148").
e. DEFORMED SHANK (6d - 2" x 0.113"; 8d - 2⅜" x 0.131": 10d - 3" x 0.148").
f. CORROSION-RESISTANT SIDING (6d - 1⅞" x 0.106"; 8d - 2⅜" x 0.128") OR CASING (6d - 2" x 0.099"; 8d - 2½" x 0.113") NAIL.
g. FASTENERS SPACED 3 INCHES ON CENTER AT EXTERIOR EDGES AND 6 INCHES ON CENTER AT INTERMEDIATE SUPPORTS, WHEN USED AS STRUCTURAL SHEATHING. SPACING SHALL BE 6 INCHES ON CENTER ON THE EDGES AND 12 INCHES ON CENTER AT INTERMEDIATE SUPPORTS FOR NONSTRUCTURAL APPLICATIONS.
h. CORROSION-RESISTANT ROOFING NAILS WITH 7/16-INCH-DIAMETER HEAD AND 1½-INCH LENGTH FOR ½-INCH SHEATHING AND 1¾-INCH-LENGTH FOR 25/32-INCH SHEATHING.
i. CORROSION-RESISTANT STAPLES WITH NOMINAL 7/16-INCH CROWN OR 1-INCH CROWN AND 1¼ -INCH LENGTH FOR ½ -INCH SHEATHING AND 1 ½ -INCH LENGTH FOR 25/32 -INCH SHEATHING. PANEL SUPPORTS AT 16 INCHES (20 INCHES IF STRENGTH AXIS IN THE LONG DIRECTION OF THE PANEL, UNLESS OTHERWISE MARKED).
j. CASING (1½" x 0.080") OR FINISH (1½" x 0.072") NAILS SPACED 6 INCHES ON PANEL EDGES, 12 INCHES AT INTERMEDIATE SUPPORTS.
k. PANEL SUPPORTS AT 24 INCHES. CASING OR FINISH NAILS SPACED 6 INCHES ON PANEL EDGES, 12 INCHES AT INTERMEDIATE SUPPORTS.
l. FOR ROOF SHEATHING APPLICATIONS, 8d NAILS (2½" x 0.113") ARE THE MINIMUM REQUIRED FOR WOOD STRUCTURAL PANELS.
m. STAPLES SHALL HAVE A MINIMUM CROWN WIDTH OF 7/16 INCH.
n. FOR ROOF SHEATHING APPLICATIONS, FASTENERS SPACED 4 INCHES ON CENTER AT EDGES, 8 INCHES AT INTERMEDIATE SUPPORTS.
o. FASTENERS SPACED 4 INCHES ON CENTER AT EDGES, 8 INCHES AT INTERMEDIATE SUPPORTS FOR SUBFLOOR AND WALL SHEATHING AND 3 INCHES ON CENTER AT EDGES, 6 INCHES AT INTERMEDIATE SUPPORTS FOR ROOFING SHEATHING.
p. FASTENERS SPACED 4 INCHES ON CENTER AT EDGES, 8 INCHES AT INTERMEDIATE SUPPORTS.

SHEAR WALL SCHEDULE PER CBC 2019

SHEAR WALL SPECIFICATIONS						FRAMING REQUIREMENTS				
							SILL PLATE[4]		TOP PLATE[3]	
SHEAR PANEL SYMBOL	UNIT SHEAR (PLF)	SHEATHING GRADE AND THICKNESS	NAIL SIZE	TYPICAL EDGE NAILING	TYPICAL FIELD NAILING	MIN STUD SIZE AT EDGES	SILL BOLTS	MIN SILL PLATE	A35	LTP4
6	**260 E 392 W**	½" CDX	**8d**	**6"**	**12"**	**2x**	⅝" Ø AT 42" O.C.	**2x**	**24" O.C.**	**24" O.C.**
4	**350 E 602 W**	½" CDX	**8d**	**4"**	**12"**	**2x**	⅝" Ø AT 27" O.C.	**2x**	**18" O.C.**	**18" O.C.**
3	**490 E 770 W**	½" CDX	**8d**	**3"**	**12"**	**3x**	⅝" Ø AT 21" O.C.	**3x**	**12" O.C.**	**12" O.C.**
2	**640 E 1022 W**	½" CDX	**8d**	**2"**	**12"**	**3x**	⅝" Ø AT 16" O.C.	**3x**	**8" O.C.**	**8" O.C.**

SHEAR WALL NOTES:

1) ALL SHEAR WALL EDGES SHALL BE SUPPORTED BY AND FASTENED TO FRAMING MEMBERS OR BLOCKING PER 2015 NDS 4.3.7.1. REFER TO TABLE 4.3A OF 2015 NDS FOR OTHER REQUIREMENTS.
2) NAILING SHALL BE LOCATED A MINIMUM OF ⅜" FROM THE PANEL EDGES. MAXIMUM NAIL SPACING AT PANEL EDGES SHALL BE 6" O.C.
3) CONTRACTOR MAY CHOOSE ONE OF THE TWO TOP PLATE CONNECTOR OPTIONS.
4) AT WALLS WHICH BEAR TRUSSES; SIMPSON'S H1 CLIP MAY BE USED IN PLACE OF ONE A35 OR LTP4 TOP PLATE CONNECTOR FOR SHEAR TRANSFER.
5) ANCHOR BOLTS ARE TO BE SPACED PER SHEAR WALL SCHEDULE U.N.O.
6) ALL SILL BOLTS ARE TO HAVE SIMPSON BP 5/8-3 BEARING PLATE WASHERS. PLATE WASHERS SHALL EXTEND TO WITHIN ½" OF THE EDGE OF THE BOTTOM PLATE ON THE SIDE(S) WITH SHEATHING OR OTHER MATERIAL WITH NOMINAL UNIT SHEAR CAPACITY GREATER THAN 400 PLF PER 2015 NDS 4.3.6.4.3.
7) STAGGER NAILING AT ALL PANEL EDGES PER 2015 NDS 4.3.7.4.
8) THE ELECTRICAL PANEL MAY NOT BE LOCATED WITHIN A SHEARWALL. IF THE ELECTRICAL PANEL IS TO BE POSITIONED WITHIN A SHEARWALL, ENGINEERING CALCULATIONS AND DETAILING MUST BE PROVIDED

ABBREVIATIONS

A.B.	= ANCHOR BOLT	HORIZ	= HORIZONTAL
A/C	= AIR CONDITIONER	HT	= HEIGHT
A/E	= ARCHITECT/ENGINEER	IF	= INSIDE FACE
ACST	= ACOUSTIC	INFO	= INFORMATION
AD	= AREA DRAIN	INSTL	= INSTALL
B.A.	= BURGLAR ALARM	INSUL	= INSULATION
BD	= BOARD	K	= KIPS
BOT	= BOTTOM	KIP	= THOUSAND POUNDS
CLR	= CLEARANCE	KSF	= KIPS PER SQUARE FOOT
CONC	= CONCRETE	LAM	= LAMINATE
COND	= CONDENSER	LIN	= LINEAR
CONST.	= CONSTRUCTION	MCJ	= MASONRY CONTROL JOINT
DBL	= DOUBLE	MIL	= MILLIMETER
DEG	= DEGREE	MIN	= MINIMUM
DEMO	= DEMOLITION	OC	= ON CENTER
DIA	= DIAMETER	OH	= OVER HANG
DIST	= DISTANCE	O	= OPEN
DJ	= DOUBLE JOIST	OSB	= ORIENTED STRAND BOARD
DW	= DISH WASHER	PCF	= POUNDS PER CUBIC FOOT
DWL	= DOWELS	PT	= PRESSURE TREATED
E	= ENAMEL	PL	= PLATE
EN	= EDGE NAIL	PSF	= POUNDS PER SQUARE FOOT
EW	= EACH WAY	RR	= ROOF RAFTER
EXIST	= EXISTING	REF	= REFRIGERATOR
EXT	= EXTERIOR	S AND P	= SHELF AND POLE
FAU	= FORCED AIR UNIT	SA	= SUPPLY AIR
FF	= FINISHED FLOOR	SD	= SMOKE DETECTOR
FIB	= FIBER	SIM	= SIMILAR
FIN	= FINISH	STL	= STEEL
FLUOR	= FLUORESCENT	SUB	= SUBSTITUTE
GA	= GAGE	TEMP	= TEMPERED
GI	= GALVANIZED METAL	TOC	= TOP OF CONCRETE
GFI	= GROUND FAULT INTERRUPTER	TOF	= TOP OF FOOTING
		TYP	= TYPICAL
GLZ	= GLAZING	UNO	= UNLESS NOTED OTHERWISE
GYP BD.	= GYPSUM BOARD	W/H	= WATER HEATER
HE	= HIGH EFFICIENCY	WP	= WEATHER PROOF
HB	= HOSE BIB	WWM	= WELDED WIREMESH

SYMBOLS

CONTINUOUS MEMBER
BLOCKING
1 / D1.0 — DETAIL NUMBER / SHEET NUMBER
4 — SHEARWALL SYMBOL (SEE SCHEDULE); SHEARWALL TYPE
10' — SHEARWALL LENGTH
N — NORTH ARROW
2 — FOOTING SYMBOL

MATERIAL PROPERTIES

CONCRETE:

1) ALL CONCRETE SHALL CONFORM TO THE SPECIFICATIONS FOR STRUCTURAL CONCRETE, ACI 301-10.
2) CONCRETE STRENGTH SHALL BE 2500 PSI AT 28 DAYS.
3) CONCRETE SHALL HAVE A MAXIMUM AGGREGATE SIZE = ¾", CONCRETE SHALL BE MIXED, PLACED, AND CURED IN ACCORDANCE TO CURRENT EDITION OF THE ACI 318.
4) CONCRETE MIX DESIGNS (INCLUDING AIR CONTENT, WATER TO CEMENT RATIOS, AND OTHER CRITERIA) SHALL CONFORM TO THE REQUIREMENTS SET FORTH IN ACI 318 TABLE 19.3.2.1, BASED ON EXPOSURE CATEGORIES AND CLASSES DEFINED IN ACI 318 TABLE 19.3.1.1. USE AIR ENTRAINING ADMIXTURE IN ALL EXTERIOR CONCRETE.
5) HOT WEATHER CONCRETING: WHEN HOT WEATHER CONDITIONS EXIST THAT WOULD IMPAIR THE QUALITY AND STRENGTH OF THE CONCRETE, REDUCE DELIVERY TIME OF READY MIX CONCRETE, LOWER THE TEMPERATURE OF MATERIALS, OR ADD RETARDER TO ENSURE THAT THE CONCRETE IS PLASTIC. RETEMPERING WITH WATER IS NOT ALLOWED. COMPLY WITH ACI 305R.

REINFORCING STEEL:

6) STEEL REINFORCEMENT SHALL CONFORM WITH ASTM A615:
   GRADE 40: #4 BARS AND SMALLER
   GRADE 60: #5 BARS AND LARGER
7) REINFORCEMENT LAP SPLICE SHALL BE IN ACCORDANCE WITH ACI, CHAPTER 12, UNLESS NOTED OTHERWISE.
8) REINFORCING SHALL NOT BE TACK WELDED OR WELDED IN ANY MANNER UNLESS SPECIFICALLY DETAILED ON THE STRUCTURAL PLANS.
9) ALL WELDED WIRE FABRIC SHALL BE DEFORMED AND SHALL CONFORM TO ASTM A479. PROVIDE IN FLAT SHEETS ONLY.
10) ALL HORIZONTAL REINFORCING IN FOOTINGS, WALLS, AND BEAMS SHALL BE CONTINUOUS AROUND CORNERS OR HAVE BENT (CORNER) BARS OF THE SAME SIZE AND SPACING AS THE HORIZONTAL BARS AND LAP 30 BAR DIAMETERS (24" MINIMUM).
11) ANCHOR BOLTS SHALL BE ASTM A307.
12) ALL ADHESIVE (EPOXY) FOR POST-INSTALLED ANCHORS AND/OR REBAR INTO CONCRETE SHALL BE SIMPSON SET-XP EPOXY-TIE ANCHOR SYSTEM.

WOOD:

13) ALL LUMBER SHALL BE IDENTIFIED WITH THE GRADE MARK AND STAMP OF THE GRADING ASSOCIATION INDICATING THE SPECIES.
14) ALL SAWN LUMBER (2"-4" THICK, 2" & WIDER) EXCEPT STUDS SHALL BE DOUGLAS FIR-LARCH NO. 2 OR BETTER.
15) ALL SAWN LUMBER (5"x5" OR LARGER BEAMS AND STRINGERS) SHALL BE DOUGLAS FIR-LARCH NO. 1 OR BETTER.
16) ALL SAWN LUMBER (5"x5" OR LARGER POSTS AND TIMBERS) SHALL BE DOUGLAS FIR-LARCH NO. 1 OR BETTER.
17) ALL STRUCTURAL GLU-LAMINATED BEAMS AND GIRDERS SHALL BE OF DOUGLAS FIR-LARCH W/ ALLOWABLE STRESSES CORRESPONDING TO 24F-V8 AS LISTED IN THE LATEST EDITION OF THE NDS CODE.
18) COORDINATE W/ ARCHITECTURAL DRAWINGS FOR FINISH OF THE SURFACE OF ALL GLU-LAMINATED BEAMS.
19) LAMINATED VENEER LUMBER (MICROLLAM, GANGLAM): ALL BEAMS SHALL HAVE A FLEXURAL STRESS OF FB = 2600 PSI AND MODULUS OF ELASTICITY OF E = 1,900,000 PSI.
20) PARALLEL STRAND LUMBER (PARALLAM): ALL BEAMS SHALL HAVE A FLEXURAL STRESS OF FB = 2900 PSI AND MODULUS OF ELASTICITY OF E = 2,000,000 PSI.
21) JOIST HANGERS SHALL BE SIMPSON STRONG-TIE OR EQUAL W/ CONNECTIONS INSTALLED ACCORDING TO MANUFACTURER'S RECOMMENDATIONS.
22) STEEL SIDE PLATES SHALL BE ASTM A36.
23) ALL NEW LUMBER SHALL NOT BE ENCLOSED WHEN THE FRAMING MEMBER EXCEEDS 19% MOISTURE CONTENT PER CALGREEN 4.505.3.
24) POWDER DRIVEN PINS AT NON-BEARING INTERIOR WOOD PARTITION SILL PLATES SHALL BE SIMPSON PDPA-300 AT 24" OC OR APPROVED EQUAL. INSTALL PER MANUFACTURER SPECIFICATIONS.

STEEL:

25) ALL STEEL ANGLES, CHANNELS, PLATES, AND BARS: ASTM A36.
26) ALL WIDE FLANGE SHAPES SHALL CONFORM TO ASTM A992, GRADE 50.
27) ALL HSS STEEL SHAPES SHALL CONFORM TO ASTM A500 GRADE B, FY = 46 KSI.
28) ALL FIELD WELDERS SHALL BE CERTIFIED WITH AWS D1.1 WITHIN THE LAST 12 MONTHS.
29) WELDING ELECTRODES: E 70 SERIES.
30) ALL FIELD WELDING SHALL BE PERFORMED IN ACCORDANCE WITH AWS.

GENERAL STRUCTURAL NOTES

CODES AND MANUALS:

IBC-18 INTERNATIONAL BUILDING CODE 2018
CBC-19 CALIFORNIA BUILDING CODE 2019
ASCE/SEI 7-16 MINIMUM DESIGN LOADS FOR BUILDINGS AND OTHER STRUCTURES
NDS 2015 NATIONAL DESIGN SPECIFICATIONS FOR WOOD CONSTRUCTION 2015
ACI 318-14 BUILDING CODE REQUIREMENTS FOR STRUCTURAL CONCRETE
AISC MANUAL OF STEEL CONSTRUCTION 15TH EDITION
AWS D1.1-04 STRUCTURAL WELDING CODE - STEEL
AWS D1.4-11 STRUCTURAL WELDING CODE - REINFORCING STEEL

GENERAL:

WILLIAMSON CHAVEZ DESIGN ASSUMES NO RESPONSIBILITY FOR ITEMS NOT A PART OF THE APPROVED AND SIGNED PLANS.

CONTRACTOR SHALL ASSUME SOLE AND COMPLETE RESPONSIBILITY FOR JOB SITE CONDITIONS DURING THE COURSE OF CONSTRUCTION OF THIS PROJECT, INCLUDING SAFETY OF ALL PERSON AND PROPERTY. THIS REQUIREMENT SHALL APPLY CONTINUOUSLY AND NOT BE LIMITED TO NORMAL WORKING HOURS AND THAT THE CONTRACTOR SHALL DEFEND, INDEMNIFY AND HOLD THE ENGINEER HARMLESS FROM ANY AND ALL LIABILITY, REAL OR ALLEGED IN THE CONNECTION WITH THE PERFORMANCE OF WORK ON THIS PROJECT EXCEPTING FOR LIABILITY ARISING FROM THE SOLE NEGLIGENCE OF THE OWNER OR THE ENGINEER.

CONTRACTOR SHALL COORDINATE DIMENSIONS OF ALL OPENINGS, DEPRESSIONS, BLOCKOUTS, ETC WITH ARCHITECTURAL DRAWINGS, DRAWINGS FROM OTHER DISCIPLINES, PROJECT SHOP DRAWINGS, AND EXISTING FIELD CONDITIONS PRIOR TO CONSTRUCTION.'

CONTRACTOR SHALL VERIFY ALL DIMENSIONS IN THE FIELD. CONTRACTOR SHALL NOTIFY ENGINEER IMMEDIATELY OF ANY DISCREPANCIES OR ERRORS DETECTED IN THE APPROVED SET OF PLANS.

WHERE DISCREPANCIES OCCUR BETWEEN PLANS, DETAILS, GENERAL NOTES, AND SPECIFICATIONS, THE MORE STRINGENT REQUIREMENTS SHALL GOVERN. DETAILS ON DRAWINGS TAKE PRECEDENCE OVER GENERAL NOTES AND TYPICAL DETAILS. WHERE NO SPECIFIC DETAILS ARE SHOWN, CONSTRUCTION SHALL CONFORM TO SIMILAR WORK ELSEWHERE ON THE PROJECT.

PROTECTION: PROPER PRECAUTIONS SHALL BE TAKEN AT ALL TIMES TO PROTECT VEHICULAR AND PEDESTRIAN TRAFFIC FROM ANY DAMAGE OR INJURY WHICH MAY BE CAUSED, EITHER DIRECTLY OR INDIRECTLY. BY THE WORK INCLUDED ON THESE DRAWINGS SUCH PRECAUTIONS SHALL INCLUDE THE ERECTION AND MAINTENANCE OF FENCES, BARRICADES, RAILINGS, GUARDS, SIGNS, COVERINGS, LIGHTS, AND OTHER PRECAUTIONS AS MAY BE REQUIRED.

SITE CONDITIONS: THE CONTRACTOR SHALL EXAMINE AND CHECK ALL EXISTING CONDITIONS, DIMENSIONS, LEVELS AND MATERIALS AND NOTIFY THE ENGINEER OF ANY DISCREPANCIES.

STRUCTURAL FLOOR MEMBERS SHALL NOT BE CUT, BORED OR NOTCHED IN EXCESS OF THE LIMITATIONS SPECIFIED IN SECTION R502.8.

DRILLING AND NOTCHING OF STUDS SHALL BE IN ACCORDANCE WITH R602.6.

STRUCTURAL ROOF MEMBERS SHALL NOT BE CUT, BORED, OR NOTCHED IN EXCESS OF THE LIMITATIONS SPECIFIED IN SECTION R802.7.

STRUCTURAL

DESIGN PARAMETERS

OCCUPANCY GROUP:	R3/U
CONSTRUCTION TYPE:	V-B
DESIGNED TO THE ASCE 7-16 STANDARDS	
RISK CATEGORY =	II
ROOF DEAD LOAD =	15 PSF
SOLAR PV DEAD LOAD =	0 PSF
ROOF LIVE LOAD =	20 PSF
FLOOR DEAD LOAD =	20 PSF
FLOOR LIVE LOAD =	40 PSF
BASIC WIND SPEED =	92 MPH
WIND EXPOSURE =	C
GROUND SNOW LOAD =	0 PSF
SEISMIC IMPORTANCE FACTOR =	1.0
LATERAL FORCE RESISTING SYSTEM = WOOD SHEAR WALLS	
RESPONSE MODIFICATIONS FACTOR, R =	6.5
OVER-STRENGTH FACTOR, OMEGA =	2.5
DEFLECTION AMPLIFICATION FACTOR, CD =	4.0
Cswood =	0.275

SEISMIC PARAMETERS	VALUE
SITE CLASS	D
Seismic Design Category, SDC	E
Short period spectral response acceleration, Ss	2.233
1-Second spectral response acceleration, S1	0.928
Short period site coefficient, Fa	1.2
1-Second site coefficient, Fv	1.7
Adjusted short period spectral response acceleration, Sms	2.679
Adjusted 1-Second period spectral response acceleration Sm1	1.670
Short period design spectral acceleration, SDS	1.786
1-Second design spectral acceleration,SD1	1.114

SHEET INDEX

S0.0 = GENERAL NOTES
S1.0 = FOUNDATION PLAN / FRAMING PLAN
D1.0 = DETAILS
D2.0 = TYPICAL DETAILS

SPECIAL INSPECTION AND TESTING

THE FOLLOWING ITEMS SHALL BE INSPECTED. "SPECIAL INSPECTION" SHALL CONFORM TO SECTION 1704 OF THE 2019 CALIFORNIA BUILDING CODE, SPECIAL INSPECTION AGENCIES AND/OR INDIVIDUALS SHALL BE RETAINED BY THE OWNER AND APPROVED BY THE BUILDING OFFICIAL PRIOR TO ANY WORK FOR MATERIAL TESTING REQUIREMENTS. SEE SPECIFICATIONS AND/OR GENERAL NOTES. TESTING AGENCY SHALL SEND COPIES OF ALL STRUCTURAL TESTING AND INSPECTION REPORTS DIRECT TO THE BUILDING OFFICIAL AND ENGINEER OF RECORD.

ITEM	REQUIRED	REMARKS

WILLIAMSON CHAVEZ DESIGN
PO BOX 53054
ALBUQUERQUE, NM 87153
PHONE NO: 661.586.1205
CONTACT: DAVID LARA, PE

LICENSED PROFESSIONAL ENGINEER
David Antonio Lara
C 87203
Civil Engineer
STATE OF CALIFORNIA
12/21/2022
EXP: 09/30/2023

GENERAL NOTES

PROPOSED ADDITION/REMODEL FOR:
JIMENEZ FAMILY
701 3RD ST.
SAN JUAN BAUTISTA, CA 95045

NO.	DATE
1	
2	
3	
4	

JOB NO:	102022-02
DATE:	12/21/2022
DRAWN BY:	DAL
SCALE:	N.T.S.

SHEET NO: S0.0

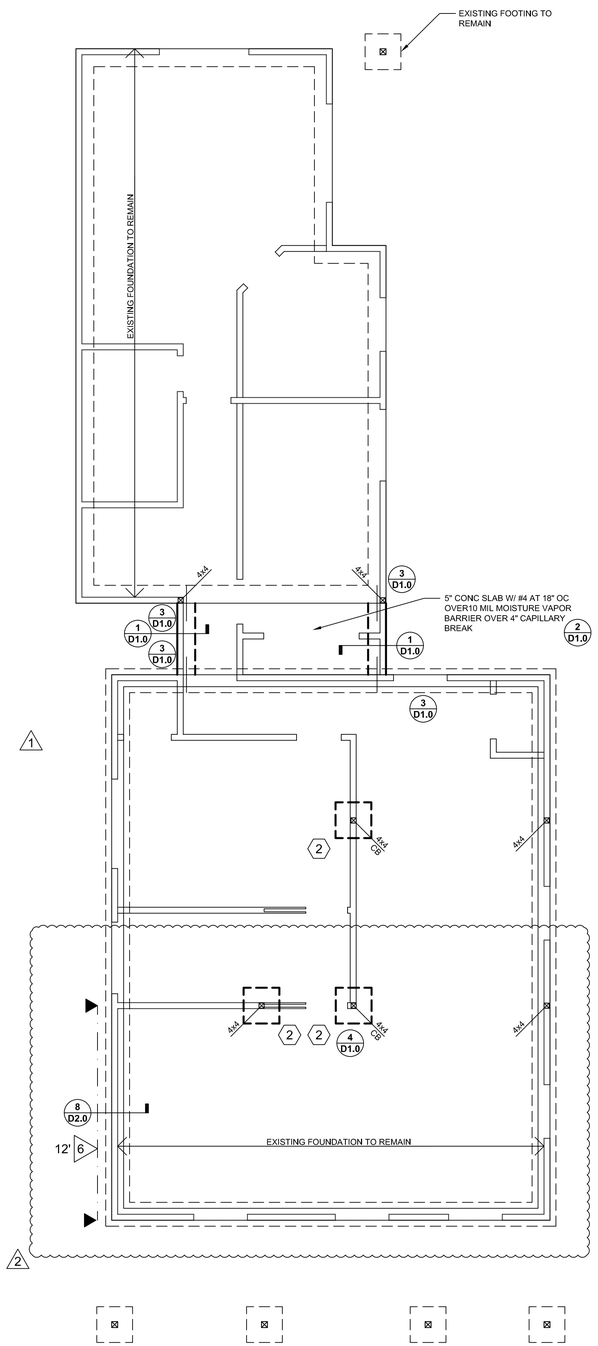

FOUNDATION PLAN

1/4" = 1'-0"

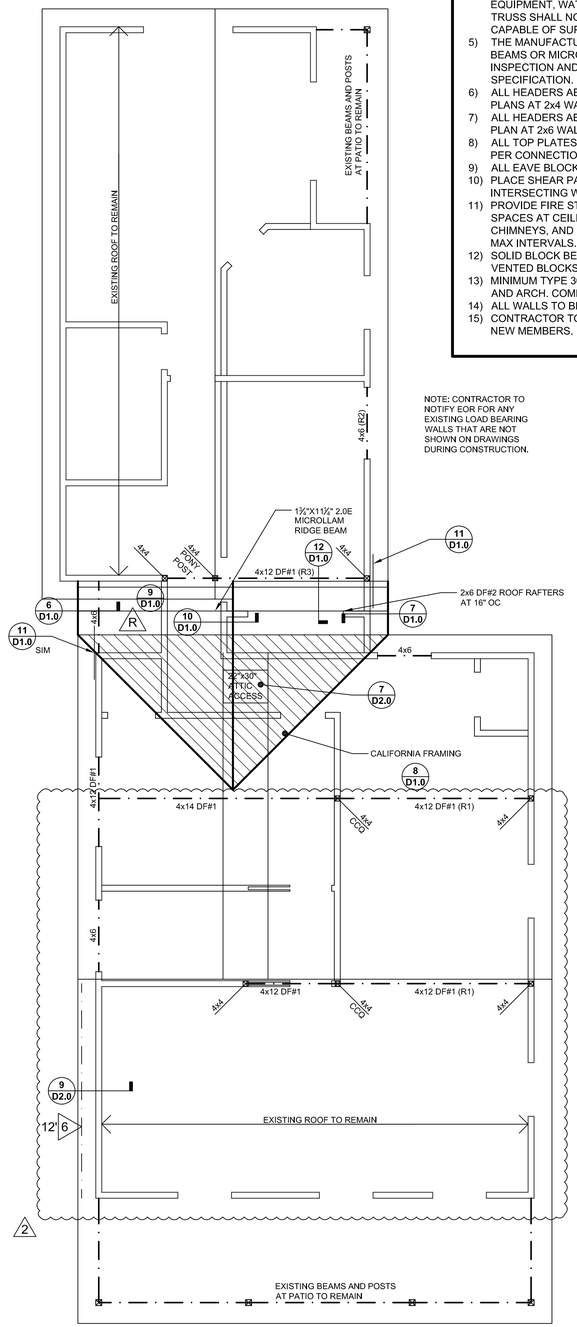

NOTE: CONTRACTOR TO NOTIFY DESIGNER AND EOR ONCE DEMO IS PERFORMED AND ALL CONDITIONS ARE EXPOSED. DESIGN TEAM TO VERIFY EXISTING STRUCTURE

FRAMING PLAN

1/4" = 1'-0"

ROOF FRAMING NOTES

1) ALL NAILING SHALL COMPLY WITH 2019 CBC TABLE 2304.10.1.
2) ROOF MEMBERS SHALL NOT BE CUT, NOTCHED, DRILLED, SPLICED OR OTHERWISE ALTERED IN ANY WAY WITHOUT THE APPROVAL OF A REGISTERED DESIGN PROFESSIONAL.
3) ROOF SHEATHING TO BE UNBLOCKED DIAPHRAGM.
4) ALTERATIONS RESULTING IN THE ADDITION OF LOAD SUCH AS HVAC EQUIPMENT, WATER HEATER, THAT EXCEEDS THE DESIGN LOAD FOR THE TRUSS SHALL NOT E PERMITTED WITHOUT VERIFICATION THAT THE TRUSS CAPABLE OF SUPPORTING SUCH ADDITIONAL LOADING.
5) THE MANUFACTURERS A.I.T.C. CERTIFICATION OF COMPLIANCE FOR GLU-LAM BEAMS OR MICRO-LAM BEAMS IS TO BE PROVIDED AT THE TIME OF FRAMING INSPECTION AND PROPERLY INDICATE THE FIBER BENDING AND GRADE SPECIFICATION.
6) ALL HEADERS ABOVE OPENINGS SHALL BE A MINIMUM OF 4x10 DF #2 U.N.O. ON PLANS AT 2x4 WALL LOCATIONS
7) ALL HEADERS ABOVE OPENINGS SHALL BE A MINIMUM OF 6x8 DF#2 U.N.O. ON PLAN AT 2x6 WALL LOCATIONS.
8) ALL TOP PLATES TO HAVE 48" MIN. LAP AT SPLICES WITH MSTC24 STAGGERED PER CONNECTION (U.N.O.).
9) ALL EAVE BLOCKS TO HAVE A35'S.
10) PLACE SHEAR PANEL ON SHEAR WALLS PRIOR TO THE CONSTRUCTION OF INTERSECTING WALLS
11) PROVIDE FIRE STOPS IN CONCEALED SPACES OF STUD WALLS INCLUDING SPACES AT CEILING AND FLOORS AND IN OPENINGS AROUND DUCTS, PIPES, CHIMNEYS, AND SIMILAR OPENINGS WHICH ALLOW PASSAGE OF FIRE. 10 FT MAX INTERVALS.
12) SOLID BLOCK BETWEEN EACH TRUSS WITH 8d AT 6" O.C. AND PROVIDE VENTED BLOCKS AT EVERY THIRD BAY IF APPLIES.
13) MINIMUM TYPE 30 FELT UNDERLAYMENT PER CBC 2019 FOR CONCRETE TILE AND ARCH. COMP.
14) ALL WALLS TO BE MINIMUM 2x4 AT 16" OC.
15) CONTRACTOR TO SHORE EXISTING STRUCTURE AS REQUIRED TO INSTALL ALL NEW MEMBERS.

CONTRACTOR SHALL NOTIFY WILLIAMSON CHAVEZ DESIGN IMMEDIATELY OF ANY DISCREPANCIES OR ERRORS DETECTED IN THE APPROVED SET OF PLANS.

WILLIAMSON CHAVEZ DESIGN ASSUMES NO RESPONSIBILITY FOR ITEMS NOT A PART OF THE APPROVED AND SIGNED PLANS

CONTRACTOR SHALL VERIFY ALL DIMENSIONS PRIOR TO CONSTRUCTION. DO NOT SCALE PLANS.

FOUNDATION NOTES

1) SEE SHEET S0.0 FOR SHEAR WALL SCHEDULE.
2) CONCRETE STRENGTH SHALL BE 2500 PSI AT 28 DAYS, EXPOSURE CLASS SO.
3) CONTRACTOR SHALL VERIFY ALL DIMENSIONS.
4) CONCRETE SAWED CONTROL JOINTS SHALL HAVE A MINIMUM DEPTH OF 1" W/ A SPACING OF 15'-0" O.C. EA. WAY.
5) ALL HOLDOWNS MUST BE TIED IN PLACE PRIOR TO FOUNDATION INSPECTION.
6) PRE-MOISTEN SOIL UNDER SLAB AND FOOTINGS.
7) LAP REINFORCEMENT BARS AS SHOWN PER DETAIL.
8) PRESSURE TREATED WOOD MUST BE USED FOR ALL SILL PLATES OR WOOD IN CONTACT WITH CONCRETE OR MASONRY.
9) TYPICAL ANCHOR BOLT SIZE AND SPACING: ⅝"Ø ANCHOR BOLTS x 12" AT 48" O.C. ALL ANCHOR BOLTS SHALL HAVE 3"x3"x0.229" STEEL BEARING PLATE W/ MIN. 7" ANCHOR BOLT EMBEDMENT U.N.O.
10) ATTACH INTERIOR WOOD POSTS TO BOTTOM P.T.D.F. SILL PLATE W/ 'SIMPSON' A34 AT EA. SIDE.
11) 4" CONCRETE PAD AT ALL EXTERIOR DOORS OVER 4" CLEAN COMPACTED FILL SAND, THICKEN AT PERIMETER.
12) PROVIDE 5/8" x 10" ANCHOR BOLTS AT 4'-0" OC MAX AT EXTERIOR WALLS (MIN 2 PER PLATE, BOLTS LOCATED AT END OF PLATE SHALL BE WITHIN 12'-0" OF END). PROVIDE ANCHOR BOLTS AT SHEAR PANELS PER SHEARWALL SCHEDULE. USE 3"x3"x0.229 PLATE WASHERS.
13) ALL ANCHOR BOLTS AND HOLDDOWNS ARE TO BE INSTALLED AND SECURELY HELD IN PLACE PRIOR TO INSPECTIONS.
14) FOR UNDER FLOOR ACCESS DETAIL, SEE DETAIL 7/D1.0. SEE ARCH FOR UNDER FLOOR ACCESS LOCATION.
15) FINISH FLOOR SHALL BE A MINIMUM OF 8" ABOVE ADJACENT FINISH GRADE. FINISH GRADE SHALL SLOPE 5% FOR A DISTANCE OF 10'-0" TO AN APPROVED WATER DISPOSAL AREA.
16) PLATE ATTACHMENT FOR ALL NON-BEARING PARTITIONS SHALL BE HILTI DN/72.145x2 7/8" LONG, SPACED AT 16" OC (ICBO 1288).
17) 6 INCH HIGH CONCRETE CURB AROUND PERIMETER OF GARAGE REQUIRED
18) VAPOR BARRIER TO BE 0.010 MIL POLYETHYLENE UNO.
19) ALL REENTRANT CORNERS SHALL HAVE 2 - #4 x 4'-0" LONG BARS.
20) ALL FOUNDATION ANCHORAGE SHALL BE LOCATED IN THE MIDDLE THIRD OF THE WIDTH OF THE SILL PLATE PER CRC.

KEYNOTES:

4 = ⅝"Ø ANCHOR BOLTS x 12" SPACED PER SHEARWALL SCHEDULE. ALL ANCHOR BOLTS SHALL HAVE 3"x3"x0.229" STEEL BEARING PLATE W/ MIN. 7" ANCHOR BOLT EMBEDMENT.

HOLDOWN SCHEDULE

HOLDOWN SPECIFICATIONS[1, 2, 3]					FRAMING REQUIRED
HOLDOWN SYMBOL	SIMPSON HOLDOWN	HOLDOWN ANCHOR[4]	SIMPSON STRAP	MINIMUM FOOTING DEPTH	POST SIZE AT HOLDOWN
▲	HDU4	**SSTB16**	-	**12" BELOW GRADE**	**4x POST**

HOLDOWN NOTES:

1) INSTALL ALL HOLDOWNS PER MANUFACTURERS SPECIFICATIONS.
2) HOLDOWN ANCHOR BOLTS ARE TO HAVE A MINIMUM OF 1¾" EDGE DISTANCE FROM CONCRETE.
3) HOLDOWN ANCHOR BOLTS ARE TO HAVE A MINIMUM OF 5" CLEARANCE FROM END WALLS.
4) PLACE HOLDOWN ANCHORS AT A DIAGONAL IN A CORNER APPLICATION PER SIMPSON CATALOG C-2018.
5) USE SSTBL MODELS AT 3x P.T. DF SILL PLATES FOR LONGER THREAD LENGTH OF 5½"

FOOTING SCHEDULE

FOOTING SYMBOL	FOOTING SIZE	STEEL REINFORCEMENT	
		LONGITUDINAL BARS	TRANSVERSE BARS
2	**2'-0" x2'-0" x 1'-0" DEEP**	3 - #4 AT BOT	3 - #4 AT BOT

DIAPHRAGM SCHEDULE

SHEAR PANEL SYMBOL	UNIT SHEAR (PLF)	UNIT SHEAR (PLF)	SHEATHING GRADE AND THICKNESS	NAIL SIZE	TYPICAL EDGE NAILING	TYPICAL FIELD NAILING
	CASE 1	**CASE 2 - 6**				
R	**240**	**180**	½" CDX OR OSB	**8d**	**6"**	**12"**
F	**285**	**215**	¾" CDX OR OSB	**10d**	**6"**	**12"**

DIAPHRAGM NOTES:

1) ALL DIAPHRAGM EDGES SHALL BE SUPPORTED BY AND FASTENED TO 2x MIN FRAMING MEMBERS OR BLOCKING PER 2018 NDS. REFER TO 4.2 OF 2018 NDS FOR OTHER REQUIREMENTS
2) NAILING SHALL BE LOCATED A MINIMUM OF ⅜" FROM THE PANEL EDGES. MAXIMUM NAIL SPACING AT PANEL EDGES SHALL BE 6" O.C.
3) ALL SHEATHING SHALL HAVE A MINIMUM 48/24 SPAN RATING.

WILLIAMSON CHAVEZ DESIGN
PO BOX 53054
ALBUQUERQUE, NM 87153
PHONE NO: 661.586.1205
CONTACT: DAVID LARA, PE

LICENSED PROFESSIONAL ENGINEER
David Antonio Lara
C 87205
Civil Engineer
STATE OF CALIFORNIA
12/21/2022
EXP: 09/30/2023

FOUNDATION PLAN
FRAMING PLAN

PROPOSED ADDITION/REMODEL FOR:
JIMENEZ FAMILY
701 3RD ST.
SAN JUAN BAUTISTA, CA 95045

NO.	DATE
1	03/02/2023
2	04/03/2023
3	
4	

JOB NO:	102022-02
DATE:	12/21/2022
DRAWN BY:	DAL
SCALE:	N.T.S.
SHEET NO:	S1.0

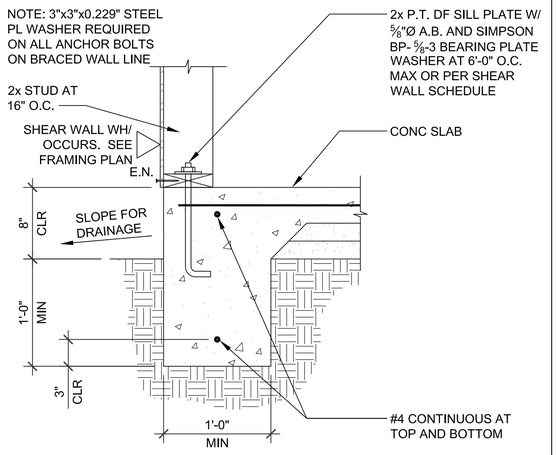

ONE-STORY SLAB ON GRADE 01-01-01

1 EXTERIOR CONTINUOUS FOOTING 1 1/2" = 1'-0"

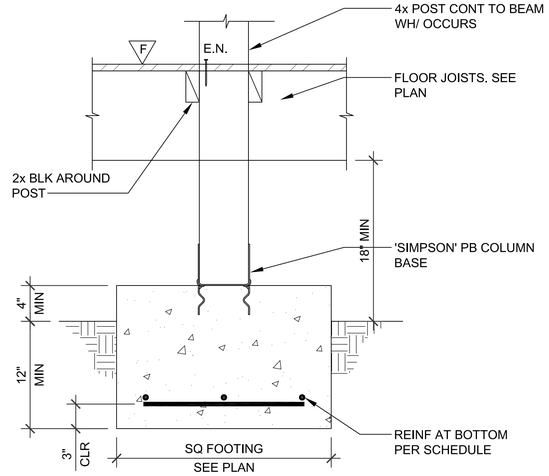

FOOTING DETAIL 01-02-02

4 INTERIOR PAD FOOTING 1 1/2" = 1'-0"

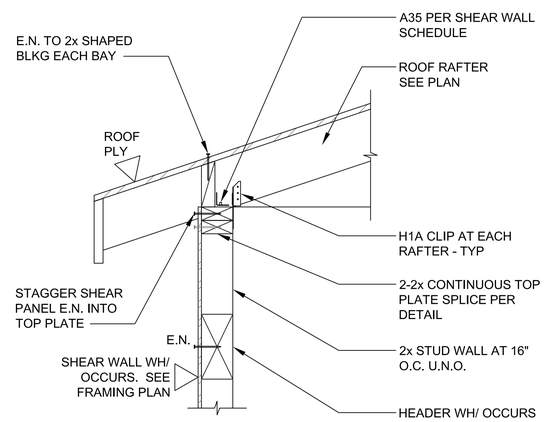

RAFTER PERPENDICULAR WITH WALL 03-01-01

7 ROOF FRAMING DETAIL 1 1/2" = 1'-0"

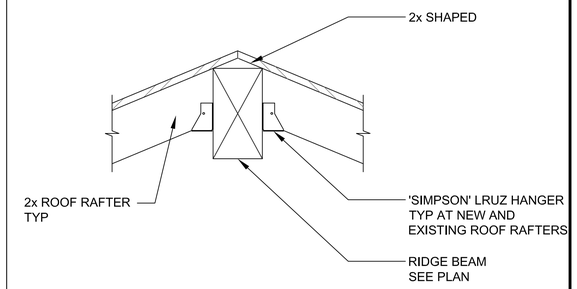

RIDGE BEAM 03-02-03

10 ROOF FRAMING DETAIL 1 1/2" = 1'-0"

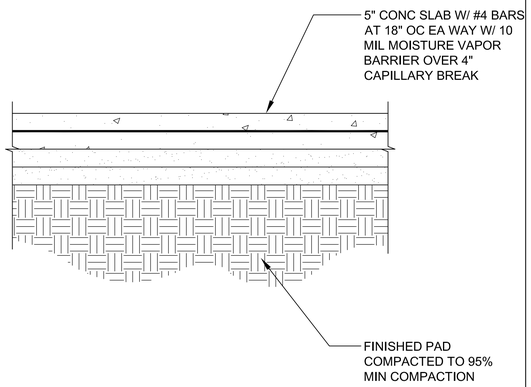

SLAB ON GRADE 01-04-02

2 TYPICAL CONCRETE SLAB NTS

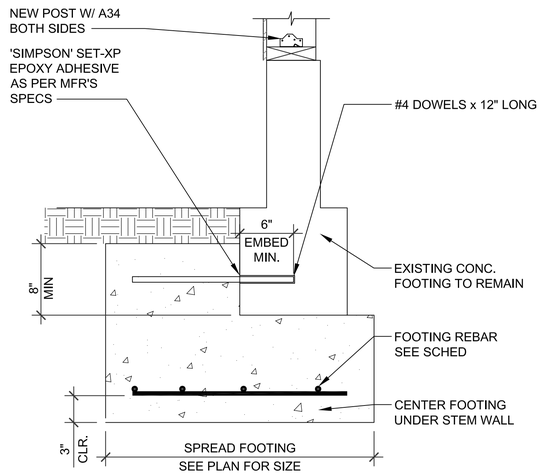

UNDERPIN DERTAIL 1 1/2" = 1'-0"

5 RETRO FIT DETAIL 1 1/2" = 1'-0"

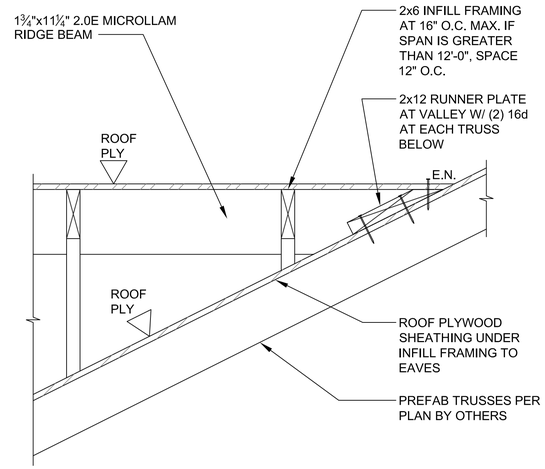

CALIFORNIA FILL 03-04-02

8 ROOF INFILL FRAMING 1 1/2" = 1'-0"

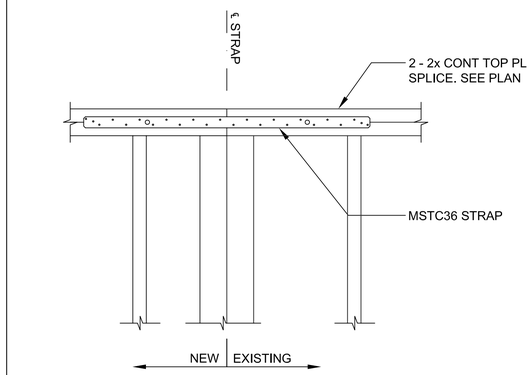

NEW WALL TO EXISTING WALL

11 DETAIL 1 1/2" = 1'-0"

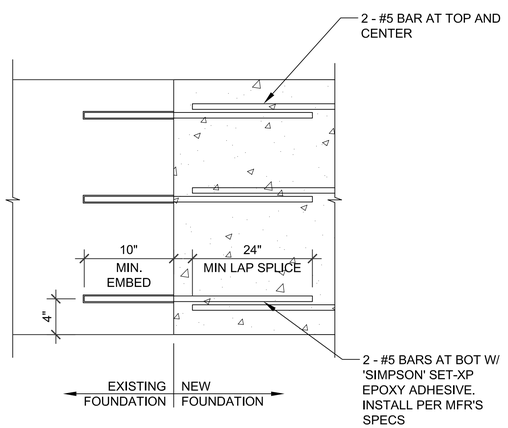

NEW TO EXISTING FOOTING 01-10-10

3 EXTERIOR CONTINUOUS FOOTING 1 1/2" = 1'-0"

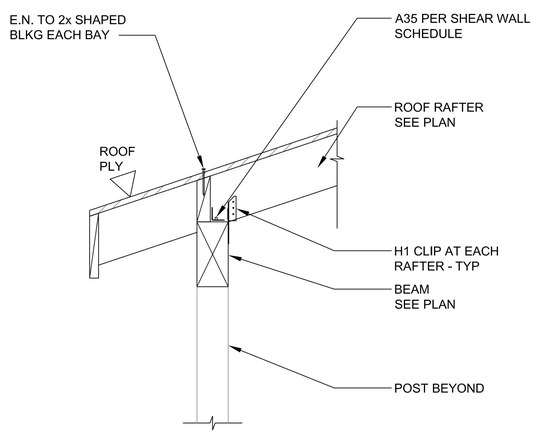

03-02-01

6 EXTERIOR BEAM AT EAVE 1 1/2" = 1'-0"

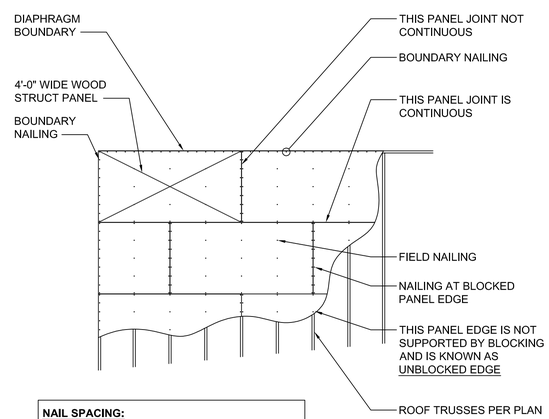

NAIL SPACING:

BOUNDARY NAILING	= 6" OC
PANEL EDGE NAILING	= 6" OC
FIELD NAILING	= 10" OC (FLOORS)
FIELD NAILING	= 12" OC (ROOFS)

UNBLOCKED DIAPHRAGM

9 DIAPHRAGM DETAIL 1/4" = 1'-0"

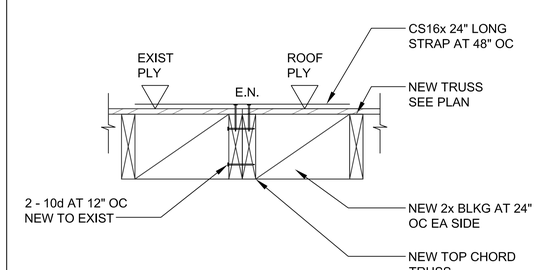

NEW TO EXISTING DIAPHRAGM

12 ROOF DETAIL 1 1/2" = 1'-0"

WILLIAMSON CHAVEZ DESIGN
PO BOX 53054
ALBUQUERQUE, NM 87153
PHONE NO: 661-566-1205
CONTACT: DAVID LARA, PE

LICENSED PROFESSIONAL ENGINEER
David Antonio Lara
C 87203
Civil Engineer
STATE OF CALIFORNIA
12/21/2022
EXP: 09/30/2023

DETAILS

PROPOSED ADDITION/REMODEL FOR:
JIMENEZ FAMILY
701 3RD ST.
SAN JUAN BAUTISTA, CA 95045

NO.	DATE
1	
2	
3	
4	

JOB NO:	102022-02
DATE:	12/21/2022
DRAWN BY:	DAL
SCALE:	N.T.S.
SHEET NO:	D1.0

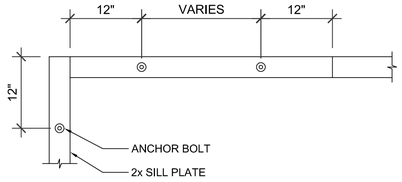

ANCHOR BOLT LAYOUT

NOTE:
ALL SILL PLATES TO BE PRESSURE-TREATED

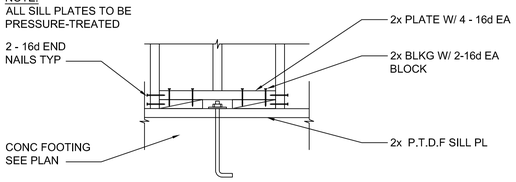

ANCHOR BOLT INTERFERENCE

1 TYPICAL ANCHOR BOLT LAYOUT N.T.S.

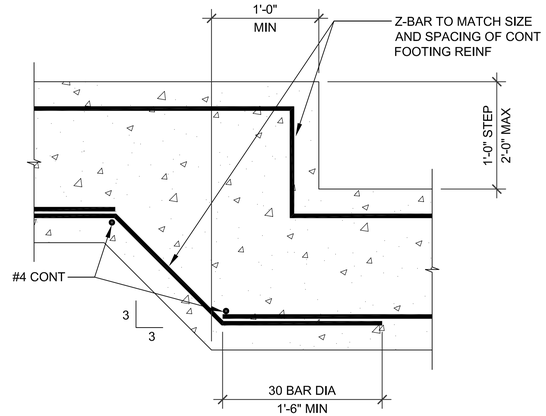

STEP IN CONC FOOTING

3 EXTERIOR CONTINUOUS FOOTING 1 1/2" = 1'-0"

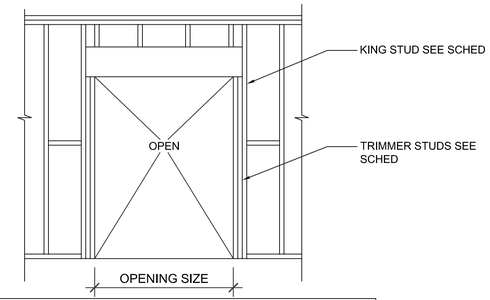

KING AND TRIMMER STUD SCHEDULE PER CBC TABLE R602.7.5				
OPENING SIZE	<140MPH, EXP B OR <130MPH, EXP C		<=115MPH, EXP B	
	TRIMMER STUD	KING STUD	TRIMMER STUD	KING STUD
0'-0" - 4'-0"	1 - 2x STUD	1 - 2x STUD	1 - 2x STUD	1 - 2x STUD
4'-1" - 6'-0"	2 - 2x STUD	2 - 2x STUD	2 - 2x STUD	1 - 2x STUD
6'-1" - 8'-0"	2 - 2x STUD	2 - 2x STUD	2 - 2x STUD	1 - 2x STUD
8'-1" - 14'-0"	3 - 2x STUD	3 - 2x STUD	3 - 2x STUD	2 - 2x STUD
14'-1" - 18'-0"	3 - 2x STUD	4 - 2x STUD	3 - 2x STUD	2 - 2x STUD

STUD SCHEDULE

6 TYPICAL OPENING DETAIL 1/2" = 1'-0"

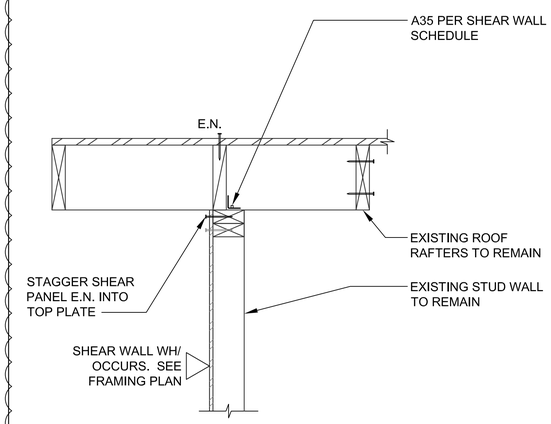

SHEAR WALL AT EXISTING WALL

9 ROOF FRAMING DETAIL 1 1/2" = 1'-0"

DEVELOPMENT LENGTH SCHEDULE									
CONCRETE F'C (PSI)	DEVELOPMENT LENGTH (INCHES)								
	REBAR SIZE								
	#3	#4	#5	#6	#7	#8	#9	#10	#11
2500	10	13	16	20	52	60	68	75	83
3000	9	12	28	33	48	55	62	69	76
3500	9	11	28	31	45	51	58	64	70

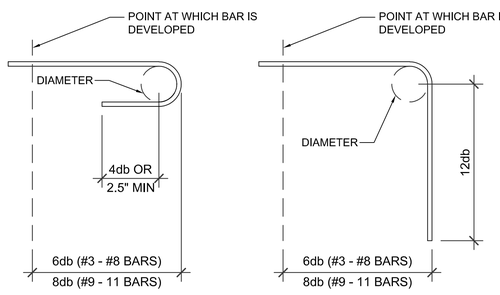

180 DEGREE HOOK FOR BARS **90 DEGREE HOOK FOR BARS**

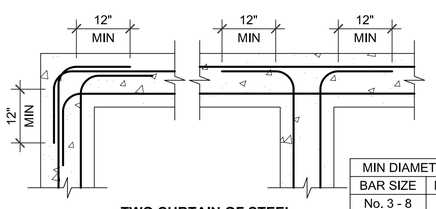

TWO CURTAIN OF STEEL

MIN DIAMETERS OF BEND	
BAR SIZE	MIN DIAMETER
No. 3 - 8	$6d_b$
No. 9 - 11	$8d_b$
No. 14 - 18	$10d_b$

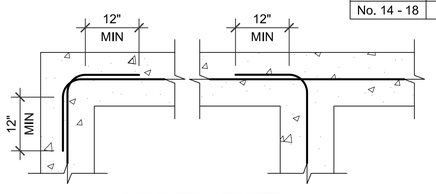

ONE CURTAIN OF STEEL

01-03-01

2 HORIZONTAL SPLICE REINFORCING 3/4" = 1'-0"

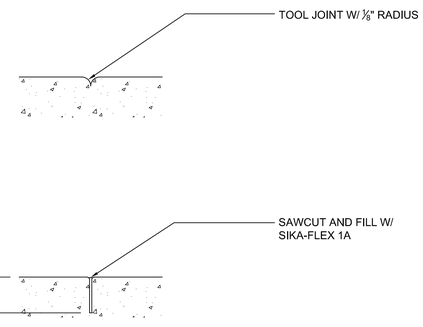

01-03-02

4 CONSTRUCTION JOINT FULL

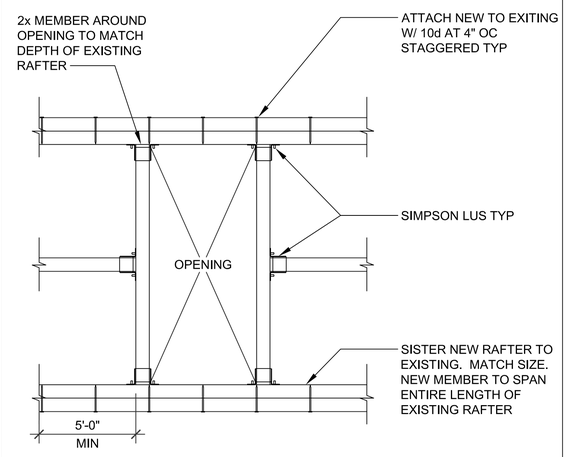

NEW SKYLIGHT AT EXISTING ROOF

7 ROOF DETAIL 1 1/2" = 1'-0"

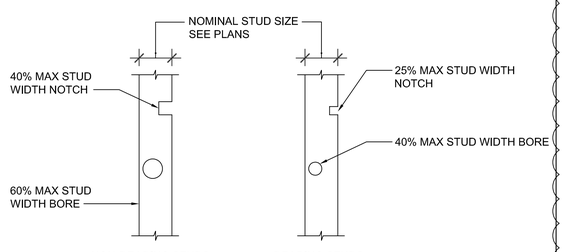

NON-BEARING STUDS **BEARING STUDS**

NOTES:
1. NOTCH AND BORING NOT TO OCCUR IN SAME STUD SECTION. DO NOT OVERCUT STUD AT NOTCHES.
2. NO MORE THAN 2 SUCCESSIVE DOUBLE STUDS MAY HAVE 60% MAX BORED HOLES

NOTE: NOTCHING IS NOT ALLOWED AT ALL DOUBLE STUDS OR WOOD POSTS

NOTCH / BORE SCHEDULE		
NOTCH/BORE % OF STUD	4" NOMINAL STUD SIZE	6" NOMINAL STUD SIZE
25%	7/8"	1 3/8"
40%	1 3/8"	2 1/8"
60%	2"	3 1/4"

STUD WALL AND BORING

5 TYPICAL NOTCHING DETAIL N.T.S.

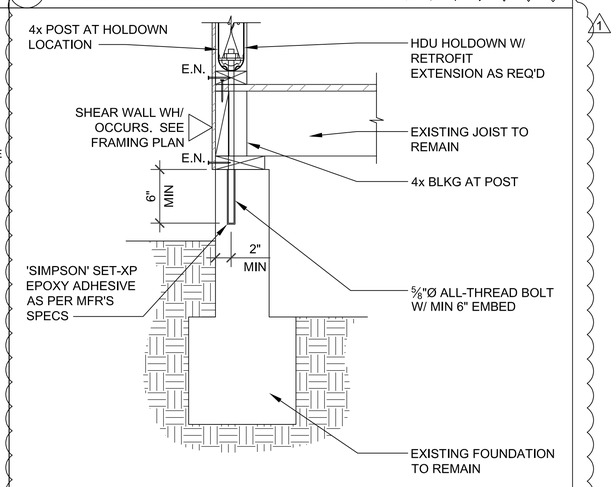

HOLDOWN TO EXISTING

8 FOUNDATION DETAIL 1 1/2" = 1'-0"

WILLIAMSON CHAVEZ DESIGN
PO BOX 53054
ALBUQUERQUE, NM 87153
PHONE NO: 661-566-1205
CONTACT: DAVID LARA, PE

LICENSED PROFESSIONAL ENGINEER
David Antonio Lara
C 87203
Civil Engineer
STATE OF CALIFORNIA
12/21/2022
EXP: 09/30/2023

TYPICAL DETAILS

PROPOSED ADDITION/REMODEL FOR:
JIMENEZ FAMILY
701 3RD ST.
SAN JUAN BAUTISTA, CA 95045

NO.	DATE
1	03/02/2023
2	04/03/2023
3	
4	

JOB NO:	102022-02
DATE:	12/21/2022
DRAWN BY:	DAL
SCALE:	N.T.S.
SHEET NO:	D2.0

TABLE 2304.9.1

FASTENING SCHEDULE

CONNECTION	FASTENING	LOCATION
1. JOIST TO SILL OR GIRDER	3 - 8d COMMON (2-1/2" x 0.131") 3 - 3" x 0.131" NAILS 3 - 3" 14 GAGE STAPLES	TOENAIL
2. BRIDGING TO JOIST	2 - 8d COMMON (2-1/2" x 0.131") 2 - 3" x 0.131" NAILS 2 - 3" 14 GAGE STAPLES	TOENAIL EACH END
3. 1" x 6" SUBFLOOR OR LESS TO EACH JOIST	2 - 8d COMMON (2-1/2" x 0.131")	FACE NAIL
4. WIDER THAN 1" x 6" SUBFLOOR TO EACH JOIST	3 - 8d COMMON (2-1/2" x 0.131")	FACE NAIL
5. 2" SUBFLOOR TO JOIST OR GIRDER	2 - 16d COMMON (3-1/2" x 0.162")	BLIND AND FACE NAIL
6. SOLE PLATE TO JOIST OR BLOCKING	16d (3-1/2" x 0.135") AT 16" o.c. 3" x 0.131" NAILS AT 8" o.c. 3" 14 GAGE STAPLES AT 12" o.c.	TYPICAL FACE NAIL
SOLE PLATE TO JOIST OR BLOCKING AT BRACED WALL PANEL	3" - 16d (3-1/2" x 0.135" AT 16" 4 - 3" x 0.131" NAILS AT 16" 4 - 3" 14 GAGE STAPLES PER 16"	BRACED WALL PANELS
7. TOP PLATE TO STUD	2 - 16d COMMON (3-1/2" x 0.162") 3 - 3" x 0.131" NAILS 3 - 3" 14 GAGE STAPLES	END NAIL
8. STUD TO SOLE PLATE	4 - 8d COMMON (2-1/2" x 0.131") 4 - 3" x 0.131" NAILS 3 - 3" 14 GAGE STAPLES	TOENAIL
	2 - 16d COMMON (3-1/2" x 0.162") 3 - 3" x 0.131" NAILS 3 - 3" 14 GAGE STAPLES	END NAIL
9. DOUBLE STUDS	16d (3-1/2" x 0.135") AT 24" o.c. 3" x 0.131" NAIL AT 8" o.c. 3" 14 GAGE STAPLE AT 8" o.c.	FACE NAIL
10. DOUBLE TOP PLATES	16d (3-1/2" x 0.135") AT 16" o.c. 3" x 0.131" NAIL AT 12" o.c. 3" 14 GAGE STAPLE AT 12" o.c.	TYPICAL FACE NAIL
DOUBLE TOP PLATES	8 - 16d COMMON (3-1/2" x 0.162") 12 - 3" x 0.131" NAILS 12 - 3" 14 GAGE STAPLES	LAP SPLICE
11. BLOCKING BETWEEN JOISTS OR RAFTERS TO TOP PLATE	3 - 8d COMMON (2-1/2" x 0.131") 3 - 3" x 0.131" NAILS 3 - 3" 14 GAGE STAPLES	TOENAIL
12. RIM JOIST TO TOP PLATE	8d (2-1/2" x 0.131") AT 6" o.c. 3" x 0.131" NAIL AT 6" o.c. 3 - 3" 14 GAGE STAPLE AT 6" o.c.	TOENAIL
13. TOP PLATES, LAPS AND INTERSECTIONS	2 - 16d COMMON (3-1/2" x 0.162") 3 - 3" x 0.131" NAILS 3 - 3" 14 GAGE STAPLES	FACE NAIL
14. CONTINUOUS HEADER, TWO PIECES	16d COMMON (3-1/2" x 0.162")	16" o.c. ALONG EDGE
15. CEILING JOISTS TO PLATE	3 - 8d COMMON (2-1/2" x 0.131") 5 - 3" x 0.131" NAILS 5 - 3" 14 GAGE STAPLES	TOENAIL
16. CONTINUOUS HEADER TO STUD	4 - 8d COMMON (2-1/2" x 0,131")	TOENAIL
17. CEILING JOISTS, LAPS OVER PARTITIONS (SEE SECTION 2308.10.4.1, TABLE 2308.10.4.1)	3 - 16d COMMON (3-1/2" x 0.162") MINIMUM, TABLE 2308.10.4.1 4 - 3" x 0.131" NAILS 4 - 3" 14 GAGE STAPLES	FACE NAIL
18. CEILING JOISTS TO PARALLEL RAFTERS (SEE SECTION 2308.10.4.1, TABLE 2308.10.4.1)	3 - 16d COMMON (3-1/2" x 0.162") MINIMUM, TABLE 2308.10.4.1 4 - 3" x 0.131" NAILS 4 - 3" 14 GAGE STAPLES	FACE NAIL
19. RAFTER TO PLATE SEE SECTION 2308.10.1, TABLE 2308.10.1)	3 - 8d COMMON (2-1/2" x 0.131") 3 - 3" x 0.131" NAILS 3 - 3" 14 GAGE STAPLES	TOENAIL
20. 1" DIAGONAL BRACE TO EACH STUD AND PLATE	2 - 8d COMMON (2-1/2" x 0.131") 2 - 3" x 0.131" NAILS 2 - 3" 14 GAGE STAPLES	FACE NAIL

TABLE 2304.9.1

FASTENING SCHEDULE

CONNECTION	FASTENING		LOCATION
21. 1" x 8" SHEATHING TO EACH BEARING	3 - 8d COMMON (2-1/2" x 0.131")		FACE NAIL
22. WIDER THAN 1" x 8" SHEATHING TO EACH BEARING	3 - 8d COMMON (2-1/2" x 0.131")		FACE NAIL
23. BUILT-UP CORNER STUDS	16d COMMON (3-1/2" x 0.162") 3" x 0.131" NAILS 3" 14 GAGE STAPLE AT 12" o.c.		24" o.c. 16" o.c. 16" o.c.
24. BUILT-UP GIRDER AND BEAMS	20d COMMON (4" x 0.192") 32" o.c. 3" x 0.131" NAIL AT 24" o.c. 3" 14 GAGE STAPLE AT 24" o.c.		FACE NAIL AT TOP AND BOTTOM STAGGERED ON OPPOSITE SIDES
	2 - 20d COMMON (4" x 0.192") 3 - 3" x 0.131" NAILS 3 - 3" 14 GAGE STAPLES		FACE NAIL AT ENDS AND AT EACH SPLICE
25. 2" PLANKS	16d COMMON (3-1/2" x 0.162")		AT EACH BEARING
26. COLLAR TIE TO RAFTER	3 - 10d COMMON (3" x 0.148") 4 - 3" x 0.131" NAILS 4 - 3" 14 GAGE STAPLES		FACE NAIL
27. JACK RAFTER TO HIP	3 - 10d COMMON (3" x 0.148") 4 - 3" x 0.131" NAILS 4 - 3" 14 GAGE STAPLES		TOENAIL
	2 - 16d COMMON (3-1/2" x 0.162") 3 - 3" x 0.131" NAILS 3 - 3" 14 GAGE STAPLES		FACE NAIL
28. ROOF RAFTER TO 2-BY RIDGE BEAM	2 - 16d COMMON (3-1/2" x 0.162") 3 - 3" x 0.131" NAILS 3 - 3" 14 GAGE STAPLES		TOENAIL
	2 - 16d COMMON (3-1/2" x 0.162") 3 - 3" x 0.131" NAILS 3 - 3" 14 GAGE STAPLES		FACE NAIL
29. JOIST TO BAND JOIST	3 - 16d COMMON (3-1/2" x 0.162") 4 - 3" x 0.131" NAILS 4 - 3" 14 GAGE STAPLES		FACE NAIL
30. LEDGER STRIP	3 - 16d COMMON (3-1/2" x 0.162") 4 - 3" x 0.131" NAILS 4 - 3" 14 GAGE STAPLES		FACE NAIL
31. WOOD STRUCTURAL PANELS AND PARTICLEBOARD[b] SUBFLOOR, ROOF AND WALL SHEATHING (TO FRAMING)	1/2" AND LESS	6d [c,l] 2-3/8" x 0.113" NAIL [n] 1-3/4" 16 GAGE [o]	
	19/32" TO 3/4"	8d [d] OR 6d [e] 2-3/8" x 0.113" NAIL [p] 2" 16 GAGE [p]	
	7/8" TO 1" 1-1/8" TO 1-1/4"	8d [c] 10d [d] OR 8d [d]	
SINGLE FLOOR (COMBINATION SUBFLOOR-UNDERLAYMENT TO FRAMING)	3/4" AND LESS	6d [e]	
	7/8" TO 1"	8d [e]	
	1-1/8" TO 1-1/4"	10d [d] OR 8d [e]	
32. PANEL SIDING (TO FRAMING)	1/2" AND LESS	6d [f]	
	5/8"	8d [f]	
33. FIBERBOARD SHEATHING	1/2"	NO. 11 GAGE ROOFING NAIL[h] 6d COMMON NAIL (2" x 0.113") NO. 16 GAGE STAPLE[l]	
	1/2"	NO. 11 GAGE ROOFING NAIL[h] 8d COMMON NAIL (2-1/2" x 0.131") NO. 16 GAGE STAPLE[l]	
34. INTERIOR PANELING	1/4"	4d [j]	
	3/8"	6d [k]	

FOR SI: 1 INCH = 25.4 MM.

a. COMMON OR BOX NAILS ARE PERMITTED TO BE USED WHERE OTHERWISE STATED.
b. NAILS SPACED 6 INCHES ON CENTER AT EDGES, 12 INCHES AT INTERMEDIATE SUPPORTS EXCEPT 6 INCHES AT SUPPORTS WHERE SPANS ARE 48 INCHES OR MORE. FOR NAILING OF WOOD STRUCTURAL PANEL AND PARTICLEBOARD DIAPHRAGMS AND SHEAR WALLS, REFER TO SECTION 2305. NAILS FOR WALL SHEATHING ARE PERMITTED TO BE COMMON, BOX OR CASING.
c. COMMON OR DEFORMED SHANK (6d - 2" x 0.113"; 8d - 2-1/2" x 0.131"; 10d - 3" x 0.148")
d. COMMON (6d - 2" x 0.113"; 8d - 2-1/2" x 0.131"; 10d - 3" x 0.148")
e. DEFORMED SHANK (6d - 2" x 0.113"; 8d - 2-1/2" x 0.131"; 10d - 3" x 0.148")
f. CORROSION-RESISTANT SIDING (6d - 1-7/8" x 0.106"; 8d - 2-3/8" x 0.128") OR CASING (6d - 2" x 0.099"; 8d - 2-1/2" x 0.113") NAIL.
g. FASTENERS SPACED 3 INCHES ON CENTER AT EXTERIOR EDGES AND 6 INCHES ON CENTER AT INTERMEDIATE SUPPORTS, WHEN USED AS STRUCTURAL SHEATHING. SPACING SHALL BE 6 INCHES ON CENTER ON THE EDGES AND 12 INCHES ON CENTER AT INTERMEDIATE SUPPORTS FOR NONSTRUCTURAL APPLICATIONS.
h. CORROSION-RESISTANT ROOFING NAILS WITH 7/16-INCH-DIAMETER HEAD AND 1-1/2-INCH LENGTH FOR 1/2-INCH SHEATHING AND 1-3/4-INCH LENGTH FOR 25/32-INCH SHEATHING.
i. CORROSION-RESISTANT STAPLES WITH NOMINAL 7/16-INCH CROWN AND 1-1/8-INCH LENGTH FOR 1/2-INCH SHEATHING AND 1-1/2-INCH LENGTH FOR 25/32-INCH SHEATHING. PANEL SUPPORTS AT 16 INCHES (20 INCHES IF STRENGTH AXIS IN THE LONG DIRECTION OF THE PANEL, UNLESS OTHERWISE MARKED).
j. CASING (1-1/2" x 0.080") OR FINISH (1-1/2" x 0.072") NAILS SPACED 6 INCHES ON PANEL EDGES, 12 INCHES AT INTERMEDIATE SUPPORTS.
k. PANEL SUPPORTS AT 24 INCHES. CASING OR FINISH NAILS SPACED 6 INCHES ON PANEL EDGES, 12 INCHES AT INTERMEDIATE SUPPORTS.
l. FOR ROOF SHEATHING APPLICATIONS, 8d NAILS (2-1/2" x 0.113") ARE THE MINIMUM REQUIRED FOR WOOD STRUCTURAL PANELS.
m. STAPLES SHALL HAVE A MINIMUM CROWN WIDTH OF 7/16 INCH.
n. FOR ROOF SHEATHING APPLICATIONS, FASTENERS SPACED 4 INCHES ON CENTER AT EDGES, 8 INCHES AT INTERMEDIATE SUPPORTS.
o. FASTENERS SPACED 4 INCHES ON CENTER AT EDGES, 8 INCHES AT INTERMEDIATE SUPPORTS FOR SUBFLOOR AND WALL SHEATHING AND 3 INCHES ON CENTER AT EDGES, 6 INCHES AT INTERMEDIATE SUPPORTS FOR ROOF SHEATHING.
p. FASTENERS SPACED 4 INCHES ON CENTER AT EDGES, 8 INCHES AT INTERMEDIATE SUPPORTS.

NAILING SCHEDULE

REVISIONS

1
2
3
4
5
6
7
8

SOUTH BAY DESIGN

DBA

ALEX VALLES
PRINCIPAL/OWNER
P.O. BOX 339
SAN JUAN BAUTISTA, CA 95045
831.207.9677
sbdesign27@yahoo.com

ADDITION/REMODEL
JIMENEZ FAMILY
701 3RD ST.
SAN JUAN BAUTISTA, CA 95045

NAILING SCHEDULE

DRAWN BY A.V.
CHECKED
DATE 10.14.22
SCALE
JOB NO.
SHEET NS

CERTIFICATE OF COMPLIANCE - RESIDENTIAL PERFORMANCE COMPLIANCE METHOD

Project Name: 3rd Street Addition
Calculation Description: Title 24 Analysis
Calculation Date/Time: 2023-01-16T08:43:10-08:00
Input File Name: 3rd Street Addition (701).ribd22x
(Page 1 of 11)

GENERAL INFORMATION					
01	Project Name	3rd Street Addition			
02	Run Title	Title 24 Analysis			
03	Project Location	701 3rd Street			
04	City	San Juan Bautista	05	Standards Version	2022
06	Zip code	95045	07	Software Version	EnergyPro 9.0
08	Climate Zone	4	09	Front Orientation (deg/ Cardinal)	45
10	Building Type	Single family	11	Number of Dwelling Units	1
12	Project Scope	Addition and/or Alteration	13	Number of Bedrooms	3
14	Addition Cond. Floor Area (ft^2)	47	15	Number of Stories	1
16	Existing Cond. Floor Area (ft^2)	1251	17	Fenestration Average U-factor	0.3
18	Total Cond. Floor Area (ft^2)	1298	19	Glazing Percentage (%)	12.80%
20	ADU Bedroom Count	n/a			

COMPLIANCE RESULTS	
01	Building Complies with Computer Performance
02	Building does not require field testing or HERS verification
03	This building incorporates one or more Special Features shown below

CERTIFICATE OF COMPLIANCE - RESIDENTIAL PERFORMANCE COMPLIANCE METHOD

Project Name: 3rd Street Addition
Calculation Description: Title 24 Analysis
Calculation Date/Time: 2023-01-16T08:43:10-08:00
Input File Name: 3rd Street Addition (701).ribd22x
(Page 2 of 11)

ENERGY USE SUMMARY						
Energy Use	Standard Design Source Energy (EDR1) (kBtu/ft^2 -yr)	Standard Design TDV Energy (EDR2) (kTDV/ft^2 -yr)	Proposed Design Source Energy (EDR1) (kBtu/ft^2 -yr)	Proposed Design TDV Energy (EDR2) (kTDV/ft^2 -yr)	Compliance Margin (EDR1)	Compliance Margin (EDR2)
Space Heating	0	87.17	0	83.6	0	3.57
Space Cooling	0	91.8	0	90.01	0	1.79
IAQ Ventilation	0	0	0	0	0	0
Water Heating	0	50.62	0	50.62	0	0
Self Utilization/Flexibility Credit						
Efficiency Compliance Total	0	229.59	0	224.23	0	5.36
Photovoltaics		0		0		
Battery				0		
Flexibility						
Indoor Lighting	0	7.73	0	7.73		
Appl. & Cooking	0	28.02	0	28.02		
Plug Loads	0	43.67	0	43.67		
Outdoor Lighting	0	1.76	0	1.76		
TOTAL COMPLIANCE	0	310.77	0	305.41		

CERTIFICATE OF COMPLIANCE - RESIDENTIAL PERFORMANCE COMPLIANCE METHOD

Project Name: 3rd Street Addition
Calculation Description: Title 24 Analysis
Calculation Date/Time: 2023-01-16T08:43:10-08:00
Input File Name: 3rd Street Addition (701).ribd22x
(Page 3 of 11)

ENERGY USE INTENSITY	Standard Design (kBtu/ft^2 - yr)	Proposed Design (kBtu/ft^2 - yr)	Compliance Margin (kBtu/ft^2 - yr)	Margin Percentage
Gross EUI[1]	52.64	51.42	1.22	2.32
Net EUI[2]	52.64	51.42	1.22	2.32

Notes
1. Gross EUI is Energy Use Total (not including PV) / Total Building Area.
2. Net EUI is Energy Use Total (including PV) / Total Building Area.

REQUIRED SPECIAL FEATURES
The following are features that must be installed as condition for meeting the modeled energy performance for this computer analysis.
• New ductwork added is less than 40 ft. in length

HERS FEATURE SUMMARY
The following is a summary of the features that must be field-verified by a certified HERS Rater as a condition for meeting the modeled energy performance for this computer analysis. Additional detail is provided in the building tables below. Registered CF2Rs and CF3Rs are required to be completed in the HERS Registry

BUILDING - FEATURES INFORMATION						
01	02	03	04	05	06	07
Project Name	Conditioned Floor Area (ft^2)	Number of Dwelling Units	Number of Bedrooms	Number of Zones	Number of Ventilation Cooling Systems	Number of Water Heating Systems
3rd Street Addition	1298	1	3	2	0	1

ZONE INFORMATION						
01	02	03	04	05	06	07
Zone Name	Zone Type	HVAC System Name	Zone Floor Area (ft^2)	Avg. Ceiling Height	Water Heating System 1	Status
Existing Living Area	Conditioned	HVAC System1	1251	9	DHW Sys 1	Existing Unchanged
New Living Area	Conditioned	HVAC System1	47	9	DHW Sys 1	New

CERTIFICATE OF COMPLIANCE - RESIDENTIAL PERFORMANCE COMPLIANCE METHOD

Project Name: 3rd Street Addition
Calculation Description: Title 24 Analysis
Calculation Date/Time: 2023-01-16T08:43:10-08:00
Input File Name: 3rd Street Addition (701).ribd22x
(Page 4 of 11)

OPAQUE SURFACES										
01	02	03	04	05	06	07	08	09	10	11
Name	Zone	Construction	Azimuth	Orientation	Gross Area (ft^2)	Window and Door Area (ft2)	Tilt (deg)	Wall Exceptions	Status	Verified Existing Condition
Front Wall	Existing Living Area	R-0 Wall	45	Front	270	44	90	none	Existing	No
Left Wall	Existing Living Area	R-0 Wall	135	Left	554	26	90	none	Existing	No
Rear Wall	Existing Living Area	R-0 Wall	225	Back	270	53.3	90	none	Existing	No
Right Wall	Existing Living Area	R-0 Wall	315	Right	554	82.7	90	none	Existing	No
Left Wall 2	New Living Area	R-15 Wall	135	Left	36	0	90	none	New	n/a
Right Wall 2	New Living Area	R-15 Wall	315	Right	36	0	90	none	New	n/a
Interior Surface	New Living Area>>Existing Living Area	R-0 Wall1	n/a	n/a	108	0	n/a		New	n/a
Interior Surface 2	New Living Area>>Existing Living Area	R-0 Wall1	n/a	n/a	108	0	n/a		New	n/a
Roof	Existing Living Area	R-11 Roof Attic	n/a	n/a	1251	n/a	n/a		Existing	No
Roof 2	New Living Area	R-30 Roof Attic	n/a	n/a	47	n/a	n/a		New	n/a

ATTIC									
01	02	03	04	05	06	07	08	09	10
Name	Construction	Type	Roof Rise (x in 12)	Roof Reflectance	Roof Emittance	Radiant Barrier	Cool Roof	Status	Verified Existing Condition
Attic Exiting Living Area	Attic RoofExiting Living Area	Ventilated	5	0.1	0.85	No	No	Existing	No
Attic New Living Area	Attic RoofNew Living Area	Ventilated	5	0.1	0.85	Yes	No	New	n/a

CERTIFICATE OF COMPLIANCE - RESIDENTIAL PERFORMANCE COMPLIANCE METHOD

Project Name: 3rd Street Addition
Calculation Description: Title 24 Analysis
Calculation Date/Time: 2023-01-16T08:43:10-08:00
Input File Name: 3rd Street Addition (701).ribd22x
(Page 5 of 11)

FENESTRATION / GLAZING															
01	02	03	04	05	06	07	08	09	10	11	12	13	14	15	16
Name	Type	Surface	Orientation	Azimuth	Width (ft)	Height (ft)	Mult.	Area (ft^2)	U-factor	U-factor Source	SHGC	SHGC Source	Exterior Shading	Status	Verified Existing Condition
Window	Window	Front Wall	Front	45			1	12	1.19	Table 110.6-A	0.83	Table 110.6-B	Bug Screen	Existing	No
Window 2	Window	Front Wall	Front	45			1	12	1.19	Table 110.6-A	0.83	Table 110.6-B	Bug Screen	Existing	No
Window 3	Window	Left Wall	Left	135			1	6	0.3	NFRC	0.23	NFRC	Bug Screen	Altered	No
Window 4	Window	Left Wall	Left	135			1	20	0.3	NFRC	0.23	NFRC	Bug Screen	Altered	No
French Door	Window	Rear Wall	Back	225			1	33.3	1.19	Table 110.6-A	0.83	Table 110.6-B	Bug Screen	Existing	No
Window 5	Window	Right Wall	Right	315			1	36.7	1.19	Table 110.6-A	0.83	Table 110.6-B	Bug Screen	Existing	No
Window 6	Window	Right Wall	Right	315			1	9	1.19	Table 110.6-A	0.83	Table 110.6-B	Bug Screen	Existing	No
Window 7	Window	Right Wall	Right	315			1	16	0.3	NFRC	0.23	NFRC	Bug Screen	Altered	No
Window 8	Window	Right Wall	Right	315			1	9	1.19	Table 110.6-A	0.83	Table 110.6-B	Bug Screen	Existing	No
Window 9	Window	Right Wall	Right	315			1	12	1.19	Table 110.6-A	0.83	Table 110.6-B	Bug Screen	Existing	No

OPAQUE DOORS					
01	02	03	04	05	06
Name	Side of Building	Area (ft^2)	U-factor	Status	Verified Existing Condition
Door	Front Wall	20	0.5	Existing	No

CERTIFICATE OF COMPLIANCE - RESIDENTIAL PERFORMANCE COMPLIANCE METHOD

Project Name: 3rd Street Addition
Calculation Description: Title 24 Analysis
Calculation Date/Time: 2023-01-16T08:43:10-08:00
Input File Name: 3rd Street Addition (701).ribd22x
(Page 6 of 11)

OPAQUE DOORS					
01	02	03	04	05	06
Name	Side of Building	Area (ft^2)	U-factor	Status	Verified Existing Condition
Door 2	Rear Wall	20	0.5	Existing	No

SLAB FLOORS									
01	02	03	04	05	06	07	08	09	10
Name	Zone	Area (ft^2)	Perimeter (ft)	Edge Insul. R-value and Depth	Edge Insul. R-value and Depth	Carpeted Fraction	Heated	Status	Verified Existing Condition
Slab	Existing Living Area	1251	183	none	0	80%	No	Existing	No
Slab 2	New Living Area	47	8	none	0	80%	No	New	n/a

OPAQUE SURFACE CONSTRUCTIONS							
01	02	03	04	05	06	07	08
Construction Name	Surface Type	Construction Type	Framing	Total Cavity R-value	Interior / Exterior Continuous R-value	U-factor	Assembly Layers
R-0 Wall	Exterior Walls	Wood Framed Wall	2x4 @ 16 in. O. C.	R-0	None / None	0.361	Inside Finish: Gypsum Board Cavity / Frame: no insul. / 2x4 Exterior Finish: 3 Coat Stucco
R-15 Wall	Exterior Walls	Wood Framed Wall	2x4 @ 16 in. O. C.	R-15	None / None	0.095	Inside Finish: Gypsum Board Cavity / Frame: R-15 / 2x4 Exterior Finish: 3 Coat Stucco
R-0 Wall1	Interior Walls	Wood Framed Wall	2x4 @ 16 in. O. C.	R-0	None / None	0.277	Inside Finish: Gypsum Board Cavity / Frame: no insul. / 2x4 Other Side Finish: Gypsum Board

CERTIFICATE OF COMPLIANCE - RESIDENTIAL PERFORMANCE COMPLIANCE METHOD

Project Name: 3rd Street Addition
Calculation Description: Title 24 Analysis
Calculation Date/Time: 2023-01-16T08:43:10-08:00
Input File Name: 3rd Street Addition (701).ribd22x
(Page 7 of 11)

OPAQUE SURFACE CONSTRUCTIONS							
01	02	03	04	05	06	07	08
Construction Name	Surface Type	Construction Type	Framing	Total Cavity R-value	Interior / Exterior Continuous R-value	U-factor	Assembly Layers
Attic RoofExiting Living Area	Attic Roofs	Wood Framed Ceiling	2x4 @ 24 in. O. C.	R-0	None / 0	0.644	Roofing: Light Roof (Asphalt Shingle) Roof Deck: Wood Siding/sheathing/decking Cavity / Frame: no insul. / 2x4
Attic RoofNew Living Area	Attic Roofs	Wood Framed Ceiling	2x4 @ 24 in. O. C.	R-0	None / 0	0.644	Roofing: Light Roof (Asphalt Shingle) Roof Deck: Wood Siding/sheathing/decking Cavity / Frame: no insul. / 2x4
R-11 Roof Attic	Ceilings (below attic)	Wood Framed Ceiling	2x4 @ 24 in. O. C.	R-11	None / None	0.081	Over Ceiling Joists: R-1.9 insul. Cavity / Frame: R-9.1 / 2x4 Inside Finish: Gypsum Board
R-30 Roof Attic	Ceilings (below attic)	Wood Framed Ceiling	2x4 @ 24 in. O. C.	R-30	None / None	0.032	Over Ceiling Joists: R-20.9 insul. Cavity / Frame: R-9.1 / 2x4 Inside Finish: Gypsum Board

BUILDING ENVELOPE - HERS VERIFICATION				
01	02	03	04	05
Quality Insulation Installation (QII)	High R-value Spray Foam Insulation	Building Envelope Air Leakage	CFM50	CFM50
Not Required	Not Required	N/A	n/a	n/a

CERTIFICATE OF COMPLIANCE - RESIDENTIAL PERFORMANCE COMPLIANCE METHOD

Project Name: 3rd Street Addition
Calculation Description: Title 24 Analysis
Calculation Date/Time: 2023-01-16T08:43:10-08:00
Input File Name: 3rd Street Addition (701).ribd22x
(Page 8 of 11)

WATER HEATING SYSTEMS											
01	02	03	04	05	06	07	08	09	10	11	12
Name	System Type	Distribution Type	Water Heater Name	Number of Units	Solar Heating System	Compact Distribution	HERS Verification	Water Heater Name (#)	Status	Verified Existing Condition	Existing Water Heating System
DHW Sys 1	Domestic Hot Water (DHW)	Standard	DHW Heater 1	1	n/a	None	n/a	DHW Heater 1 (1)	Existing	No	

WATER HEATERS															
01	02	03	04	05	06	07	08	09	10	11	12	13	14	15
Name	Heating Element Type	Tank Type	# of Units	Tank Vol. (gal)	Heating Efficiency Type	Efficiency	Rated Input Type	Input Rating or Pilot	Tank Insulation R-value (int/Ext)	Standby Loss or Recovery Eff	1st Hr. Rating or Flow Rate	Tank Location	Status	Verified Existing Condition
DHW Heater 1	Gas	Small Storage	1	50	EF	0.53	Btu/Hr	75000	0	80			Existing	No

WATER HEATING - HERS VERIFICATION						
01	02	03	04	05	06	07
Name	Pipe Insulation	Parallel Piping	Compact Distribution	Compact Distribution Type	Recirculation Control	Shower Drain Water Heat Recovery
DHW Sys 1 - 1/1	Not Required	Not Required	Not Required	None	Not Required	Not Required

CERTIFICATE OF COMPLIANCE - RESIDENTIAL PERFORMANCE COMPLIANCE METHOD

Project Name: 3rd Street Addition
Calculation Description: Title 24 Analysis
Calculation Date/Time: 2023-01-16T08:43:10-08:00
Input File Name: 3rd Street Addition (701).ribd22x
(Page 9 of 11)

SPACE CONDITIONING SYSTEMS												
01	02	03	04	05	06	07	08	09	10	11	12
Name	System Type	Heating Unit Name	Heating Equipment Count	Cooling Unit Name	Cooling Equipment Count	Fan Name	Distribution Name	Required Thermostat Type	Status	Verified Existing Condition	Existing HVAC System
HVAC System1	Heating and cooling system other	Heating Component 1	1	Cooling Component 1	1	HVAC Fan 1	Air Distribution System 1	n/a	Existing	No	

HVAC - HEATING UNIT TYPES			
01	02	03	04
Name	System Type	Number of Units	Heating Efficiency
Heating Component 1	Central gas furnace	1	AFUE-80

HVAC - COOLING UNIT TYPES								
01	02	03	04	05	06	07	08	09
Name	System Type	Number of Units	Efficiency Metric	Efficiency EER/EER2/CEER	Efficiency SEER/SEER2	Zonally Controlled	Multi-speed Compressor	HERS Verification
Cooling Component 1	No Cooling	1		n/a	n/a	Not Zonal	Single Speed	n/a

REVISIONS

1	
2	
3	
4	
5	
6	
7	
8	

SOUTH BAY DESIGN
DBA
ALEX VALLES
PRINCIPAL/OWNER
P.O. BOX 339
SAN JUAN BAUTISTA, CA 95045
831.207.9677
sbdesign27@yahoo.com

ADDITION/REMODEL
JIMENEZ FAMILY
701 3RD ST.
SAN JUAN BAUTISTA, CA 95045

TITLE 24'S

DRAWN BY A.V.
CHECKED
DATE 10.14.22
SCALE
JOB NO.
SHEET
T

CERTIFICATE OF COMPLIANCE - RESIDENTIAL PERFORMANCE COMPLIANCE METHOD

Project Name: 3rd Street Addition
Calculation Description: Title 24 Analysis
Calculation Date/Time: 2023-01-16T08:43:10-08:00
Input File Name: 3rd Street Addition (701).ribd22x
(Page 10 of 11)

HVAC - DISTRIBUTION SYSTEMS

01	02	03	04	05	06	07	08	09	10	11	12	13	14	15	16
Name	Type	Design Type	Duct Ins. R-value		Duct Location		Surface Area		Bypass Duct	Duct Leakage	HERS Verification	Status	Verified Existing Condition	Existing Distribution system	New Ducts 25 ft
			Supply	Return	Supply	Return	Supply	Return							
Air Distribution System 1	Unconditioned attic	Non-Verified	R-6	R-6	Attic	Attic	n/a	n/a	No Bypass Duct	Existing (not specified)	Air Distribution System 1-hers-dist	Existing + New	No		No

HVAC - FAN SYSTEMS

01	02	03	04
Name	Type	Fan Power (Watts/CFM)	Name
HVAC Fan 1	HVAC Fan	0.58	n/a

Registration Number:
CA Building Energy Efficiency Standards - 2022 Residential Compliance
Registration Date/Time:
Report Version: 2022.0.000
Schema Version: rev 20220901
HERS Provider:
Report Generated: 2023-01-16 08:43:35

CERTIFICATE OF COMPLIANCE - RESIDENTIAL PERFORMANCE COMPLIANCE METHOD

Project Name: 3rd Street Addition
Calculation Description: Title 24 Analysis
Calculation Date/Time: 2023-01-16T08:43:10-08:00
Input File Name: 3rd Street Addition (701).ribd22x
(Page 11 of 11)

DOCUMENTATION AUTHOR'S DECLARATION STATEMENT

I, I certify that this Certificate of Compliance documentation is accurate and complete.

Documentation Author Name: Timothy Carstairs, CEA, HERS, GPR	Documentation Author Signature:
Company: Carstairs Energy Inc.	Signature Date: 1/16/2023
Address: 2238 Bayview Heights Drive Suite E	CEA/ HERS Certification Identification (If applicable): R19-06-2006
City/State/Zip: Los Osos, CA 93402	Phone: 805-904-9048

RESPONSIBLE PERSON'S DECLARATION STATEMENT

I certify the following under penalty of perjury, under the laws of the State of California:

1. I am eligible under Division 3 of the Business and Professions Code to accept responsibility for the building design identified on this Certificate of Compliance.
2. I certify that the energy features and performance specifications identified on this Certificate of Compliance conform to the requirements of Title 24, Part 1 and Part 6 of the California Code of Regulations.
3. The building design features or system design features identified on this Certificate of Compliance are consistent with the information provided on other applicable compliance documents, worksheets, calculations, plans and specifications submitted to the enforcement agency for approval with this building permit application.

Responsible Designer Name: Alex Valles	Responsible Designer Signature:
Company: South Bay Design	Date Signed:
Address: PO Box 339	License:
City/State/Zip: San Juan Bautista, CA 95045	Phone: 831-207-9677

Registration Number:
CA Building Energy Efficiency Standards - 2022 Residential Compliance
Registration Date/Time:
Report Version: 2022.0.000
Schema Version: rev 20220901
HERS Provider:
Report Generated: 2023-01-16 08:43:35

2022 Single-Family Residential Mandatory Requirements Summary

NOTE: Single-family residential buildings subject to the Energy Codes must comply with all applicable mandatory measures, regardless of the compliance approach used. Review the respective section for more information.
(MO002)

Building Envelope:

§ 110.6(a)1	**Air Leakage.** Manufactured fenestration, exterior doors, and exterior pet doors must limit air leakage to 0.3 CFM per square foot or less when tested per NFRC-400, ASTM E283, or AAMA/WDMA/CSA 101/I.S.2/A440-2011. *
§ 110.6(a)5	**Labeling.** Fenestration products and exterior doors must have a label meeting the requirements of § 10-111(a)
§ 110.6(b)i	**Field fabricated exterior doors and fenestration** products must use U-factors and solar heat gain coefficient (SHGC) values from Tables 110.6-A, 110.6-B, or JA4.5 for exterior doors. They must be caulked and/or weather stripped.
§ 110.7	**Air Leakage.** All joints, penetrations, and other openings in the building envelope that are potential sources of air leakage must be caulked, gasketed, or weather stripped.
§ 110.8(a)	**Insulation Certification by Manufacturers.** Insulation must be certified by the Department of Consumer Affairs, Bureau of Household Goods and Services (BHGS).
§ 110.8(g)	**Insulation Requirements for Heated Slab Floors.** Heated slab floors must be insulated per the requirements of § 110.8(g).
§ 110.8(i)	**Roofing Products Solar Reflectance and Thermal Emittance.** The thermal emittance and aged solar reflectance values of the roofing material must meet the requirements of § 110.8(i) and be labeled per §10-113 when the installation of a cool roofing specified on the CF-1R.
§ 110.8(j)	**Radiant Barrier.** When required, radiant barriers must have an emittance of 0.05 or less and be certified to the Department of Consumer Affairs.
§ 150.0(a)	**Roof Deck, Ceiling and Rafter Roof Insulation.** Roof decks in newly constructed attics in climate zones 4 and 8-16 area-weighted average U-factor not exceeding U0.184. Ceiling and rafter roofs minimum R-22 insulation in wood-frame ceiling, or area-weighted average U-factor must not exceed 0.043. Rafter roof alterations minimum R-19 or area-weighted average U-factor of 0.054 or less. Attic access doors must have permanently attached insulation using adhesive or mechanical fasteners. The attic access must be gasketed to prevent air leakage. Insulation must be installed in direct contact with a roof or ceiling which is sealed to limit infiltration and exfiltration, as specified in § 110.7, including but not limited to placing insulation either above or below the roof deck or on top of a drywall ceiling. *
§ 150.0(b)	**Loose-fill Insulation.** Loose fill insulation must meet the manufacturer's required density for the labeled R-value.
§ 150.0(c)	**Wall Insulation.** Minimum R-13 insulation in 2x4 inch wood framing wall or have a U-factor of 0.102 or less, or R-20 in 2x6 inch wood framing or have a U-factor of 0.071 or less. Opaque non-framed assemblies must have an overall assembly U-factor not exceeding 0.102. Masonry walls must meet Tables 150.1-A or B. *
§ 150.0(d)	**Raised-floor Insulation.** Minimum R-19 insulation in raised wood framed floor or 0.037 maximum U-factor. *
§ 150.0(f)	**Slab Edge Insulation.** Slab edge insulation must meet all of the following: have a water absorption rate, for the insulation material alone without facings, no greater than 0.3 percent, have a water vapor permeance no greater than 2.0 perm per inch, be protected from physical damage and UV light deterioration, and, when installed as part of a heated slab floor, meet the requirements of § 110.8(g).
§ 150.0(g)1	**Vapor Retarder.** In climate zones 11 through 16, the earth floor of unvented crawl space must be covered with a Class I or Class II vapor retarder. This requirement also applies to controlled ventilation crawl space for buildings complying with the exception to §150.0(d).
§ 150.0(g)2	**Vapor Retarder.** In climate zones 14 and 16, a Class I or Class II vapor retarder must be installed on the conditioned space side of all insulation in all exterior walls, vented attics, and unvented attics within or permeable insulation.
§ 150.0(p)	**Fenestration Products.** Fenestration, including skylights, separating conditioned space from unconditioned space or outdoors must have a maximum U-factor of 0.46, or area-weighted average U-factor of all fenestration must not exceed 0.46. *

Fireplaces, Decorative Gas Appliances, and Gas Log:

§ 110.5(a)	**Pilot Light.** Continuously burning pilot lights are not allowed for indoor and outdoor fireplaces.
§ 150.0(e)1	**Closable Doors.** Masonry or factory-built fireplaces must have a closable metal or glass door covering the entire opening of the firebox.
§ 150.0(e)2	**Combustion Intake.** Masonry or factory-built fireplaces must have a combustion outside air intake, which is at least six square inches in area and is equipped with a readily accessible, operable, and tight-fitting damper or combustion-air control device.
§ 150.0(e)3	**Flue Damper.** Masonry or factory-built fireplaces must have a flue damper with a readily accessible control. *

Space Conditioning, Water Heating, and Plumbing System:

§ 110.0-§ 110.3	**Certification.** Heating, ventilation, and air conditioning (HVAC) equipment, water heaters, showerheads, faucets, and all other regulated appliances must be certified by the manufacturer to the California Energy Commission.
§ 110.2(a)	**HVAC Efficiency.** Equipment must meet the applicable efficiency requirements in Table 110.2-A through Table 110.2-N. *
§ 110.2(b)	**Controls for Heat Pumps with Supplementary Electric Resistance Heaters.** Heat pumps with supplementary electric resistance heaters must have controls that prevent supplementary heater operation when the heating load can be met by the heat pump alone; and in which the cut-on temperature for compression heating is higher than the cut-on temperature for supplementary heating, and the cut-off temperature for compression heating is higher than the cut-off temperature for supplementary heating.
§ 110.2(c)	**Thermostats.** All heating or cooling systems not controlled by a central energy management control system (EMCS) must have a setback thermostat. *
§ 110.3(a)3	**Insulation.** Unfired service water heater storage tanks and solar water-heating backup tanks must have adequate insulation, or tank surface heat loss rating.
§ 110.3(c)6	**Isolation Valves.** Instantaneous water heaters with an input rating greater than 6.8 kBtu per hour (2 kW) must have isolation valves with hose bibbs or other fittings on both cold and hot water lines to allow for flushing the water heater when the valves are closed.

5/6/22

2022 Single-Family Residential Mandatory Requirements Summary

§ 150.0(m)13	**Space Conditioning System Airflow Rate and Fan Efficacy.** Space conditioning systems that use ducts to supply cooling must have a hole for the placement of a static pressure probe, or a permanently installed static pressure probe in the supply plenum. Airflow must be ≥ 350 CFM per ton of nominal cooling capacity, and an air-handling unit fan efficacy ≤ 0.45 watts per CFM for gas furnace air handlers and ≤ 0.58 watts per CFM for all others. Small duct high velocity systems must provide airflow ≥ 250 CFM per ton of nominal cooling capacity, and an air-handling unit fan efficacy ≤ 0.62 watts per CFM. Field verification testing is required in accordance with Reference Residential Appendix RA3.3. *

Ventilation and Indoor Air Quality:

§ 150.0(o)1	**Requirements for Ventilation and Indoor Air Quality.** All dwelling units must meet the requirements of ASHRAE Standard 62.2, Ventilation and Acceptable Indoor Air Quality in Residential Buildings subject to the amendments specified in § 150.0(o) 1. *
§ 150.0(o)1B	**Central Fan Integrated (CFI) Ventilation Systems.** Continuous operation of CFI air handlers is not allowed to provide the whole-dwelling unit ventilation airflow required per § 150.0(o)1C. A motorized damper(s) must be installed on the ventilation duct(s) that prevents all airflow through the space conditioning duct system when the damper(s) is closed and controlled per § 150.0(o)1BvBiv. CFI ventilation systems must have controls that track outdoor air ventilation run time, and either open or close the motorized damper(s) for compliance with § 150.0(o)1C.
§ 150.0(o)1C	**Whole-Dwelling Unit Mechanical Ventilation for Single-Family Detached and townhouses.** Single-family detached dwelling units, and attached dwelling units not sharing ceilings or floors with other dwelling units, occupiable spaces, public garages, or commercial spaces must have mechanical ventilation airflow specified in § 150.0(o)1Ci-iii.
§ 150.0(o)1G	**Local Mechanical Exhaust.** Kitchens and bathrooms must have local mechanical exhaust, nonresidential kitchens must have demand-controlled exhaust system meeting requirements of § 150.0(o)1Gii, enclosed kitchens and bathrooms can use demand-controlled or continuous exhaust meeting § 150.0(o)1Giii-iv. Airflow must be measured by the installer per § 150.0(o)1Gv, and rated for sound per § 150.0(o)1Gvi. *
§ 150.0(o)1I-M	**Airflow Measurement and Sound Ratings of Whole-Dwelling Unit Ventilation Systems.** The airflow required per § 150.0(o)1C must be measured by using a flow hood, flow grid, or other airflow measuring device at the fan's inlet or outlet terminals/grilles per Reference Residential Appendix RA3.7. Whole-Dwelling unit ventilation systems must be rated for sound per ASHRAE 62.2 §7.2 at no less than the minimum airflow rate required by § 150.0(o)1C.
§ 150.0(o)2	**Field Verification and Diagnostic Testing.** Whole-Dwelling Unit ventilation airflow, vented range hood airflow and sound rating, and HRV and ERV fan efficacy must be verified in accordance with Reference Residential Appendix RA3.7. Vented range hoods must be verified per Reference Residential Appendix RA3.7.4.3 to confirm if it is rated by HVI or AHAM to comply with the airflow rates and sound requirements per § 150.0(o)1G

Pool and Spa Systems and Equipment:

§ 110.4(a)	**Certification by Manufacturers.** Any pool or spa heating system or equipment must be certified to have all of the following: compliance with the Appliance Efficiency Regulations and listing in MAEDBS, an on-off switch mounted outside of the heater that allows shutting off the heater without adjusting the thermostat setting, a permanent weatherproof plate or card with operating instructions; and must not use electric resistance heating. *
§ 110.4(b)1	**Piping.** Any pool or spa heating system or equipment must be installed with at least 36 inches of pipe between the filter and the heater, or dedicated suction and return lines, or built-in or built-up connections to allow for future solar heating.
§ 110.4(b)2	**Covers.** Outdoor pools or spas that have a heat pump or gas heater must have a cover.
§ 110.4(b)3	**Directional Inlets and Time Switches for Pools.** Pools must have directional inlets that adequately mix the pool water, and a time switch that will allow all pumps to be set or programmed to run only during off-peak electric demand periods.
§ 110.5	**Pilot Light.** Natural gas pool and spa heaters must not have a continuously burning pilot light.
§ 150.0(p)	**Pool Systems and Equipment Installation.** Residential pool systems or equipment must meet the specified requirements for pump sizing, flow rate, piping, filters, and valves. *

Lighting:

§ 110.9	**Lighting Controls and Components.** All lighting control devices and systems, ballasts, and luminaires must meet the applicable requirements of § 110.9. *
§ 150.0(k)1A	**Luminaire Efficacy.** All installed luminaires must meet the requirements in Table 150.0-A, except lighting integral to exhaust fans, kitchen range hoods, bath vanity mirrors, and garage door openers; navigation lighting less than 5 watts; and lighting internal to drawers, cabinets, and linen closets with an efficacy of at least 45 lumens per watt.
§ 150.0(k)1B	**Screw based luminaires.** Screw based luminaires must contain lamps that comply with Reference Joint Appendix JA8. *
§ 150.0(k)1C	**Recessed Downlight Luminaires in Ceilings.** Luminaires recessed into ceilings must not contain screw based sockets, must be airtight, and must be sealed with a gasket or caulk. California Electrical Code § 410.116 must also be met.
§ 150.0(k)1D	**Light Sources in Enclosed or Recessed Luminaires.** Lamps and other separable light sources that are not compliant with the JA8 elevated temperature requirements, including marking requirements, must not be installed in enclosed or recessed luminaires.
§ 150.0(k)1E	**Blank Electrical Boxes.** The number of electrical boxes that are more than five feet above the finished floor and do not contain a luminaire or other device shall be no more than the number of bedrooms. These boxes must be served by a dimmer, vacancy sensor control, low voltage wiring, or fan speed control.
§ 150.0(k)1F	**Lighting Integral to Exhaust Fans.** Lighting integral to exhaust fans (except when installed by the manufacturer in kitchen exhaust hoods) must meet the applicable requirements of § 150.0(k). *

5/6/22

2022 Single-Family Residential Mandatory Requirements Summary

§ 150.0(m)13	**Space Conditioning System Airflow Rate and Fan Efficacy.** Space conditioning systems that use ducts to supply cooling must have a hole for the placement of a static pressure probe, or a permanently installed static pressure probe in the supply plenum. Airflow must be ≥ 350 CFM per ton of nominal cooling capacity, and an air-handling unit fan efficacy ≤ 0.45 watts per CFM for gas furnace air handlers and ≤ 0.58 watts per CFM for all others. Small duct high velocity systems must provide airflow ≥ 250 CFM per ton of nominal cooling capacity, and an air-handling unit fan efficacy ≤ 0.62 watts per CFM. Field verification testing is required in accordance with Reference Residential Appendix RA3.3. *

Ventilation and Indoor Air Quality:

§ 150.0(o)1	**Requirements for Ventilation and Indoor Air Quality.** All dwelling units must meet the requirements of ASHRAE Standard 62.2, Ventilation and Acceptable Indoor Air Quality in Residential Buildings subject to the amendments specified in § 150.0(o) 1. *
§ 150.0(o)1B	**Central Fan Integrated (CFI) Ventilation Systems.** Continuous operation of CFI air handlers is not allowed to provide the whole-dwelling unit ventilation airflow required per § 150.0(o)1C. A motorized damper(s) must be installed on the ventilation duct(s) that prevents all airflow through the space conditioning duct system when the damper(s) is closed and controlled per § 150.0(o)1BvBiv. CFI ventilation systems must have controls that track outdoor air ventilation run time, and either open or close the motorized damper(s) for compliance with § 150.0(o)1C.
§ 150.0(o)1C	**Whole-Dwelling Unit Mechanical Ventilation for Single-Family Detached and townhouses.** Single-family detached dwelling units, and attached dwelling units not sharing ceilings or floors with other dwelling units, occupiable spaces, public garages, or commercial spaces must have mechanical ventilation airflow specified in § 150.0(o)1Ci-iii.
§ 150.0(o)1G	**Local Mechanical Exhaust.** Kitchens and bathrooms must have local mechanical exhaust, nonresidential kitchens must have demand-controlled exhaust system meeting requirements of § 150.0(o)1Gii, enclosed kitchens and bathrooms can use demand-controlled or continuous exhaust meeting § 150.0(o)1Giii-iv. Airflow must be measured by the installer per § 150.0(o)1Gv, and rated for sound per § 150.0(o)1Gvi. *
§ 150.0(o)1I-M	**Airflow Measurement and Sound Ratings of Whole-Dwelling Unit Ventilation Systems.** The airflow required per § 150.0(o)1C must be measured by using a flow hood, flow grid, or other airflow measuring device at the fan's inlet or outlet terminals/grilles per Reference Residential Appendix RA3.7. Whole-Dwelling unit ventilation systems must be rated for sound per ASHRAE 62.2 §7.2 at no less than the minimum airflow rate required by § 150.0(o)1C.
§ 150.0(o)2	**Field Verification and Diagnostic Testing.** Whole-Dwelling Unit ventilation airflow, vented range hood airflow and sound rating, and HRV and ERV fan efficacy must be verified in accordance with Reference Residential Appendix RA3.7. Vented range hoods must be verified per Reference Residential Appendix RA3.7.4.3 to confirm if it is rated by HVI or AHAM to comply with the airflow rates and sound requirements per § 150.0(o)1G

Pool and Spa Systems and Equipment:

§ 110.4(a)	**Certification by Manufacturers.** Any pool or spa heating system or equipment must be certified to have all of the following: compliance with the Appliance Efficiency Regulations and listing in MAEDBS, an on-off switch mounted outside of the heater that allows shutting off the heater without adjusting the thermostat setting, a permanent weatherproof plate or card with operating instructions; and must not use electric resistance heating. *
§ 110.4(b)1	**Piping.** Any pool or spa heating system or equipment must be installed with at least 36 inches of pipe between the filter and the heater, or dedicated suction and return lines, or built-in or built-up connections to allow for future solar heating.
§ 110.4(b)2	**Covers.** Outdoor pools or spas that have a heat pump or gas heater must have a cover.
§ 110.4(b)3	**Directional Inlets and Time Switches for Pools.** Pools must have directional inlets that adequately mix the pool water, and a time switch that will allow all pumps to be set or programmed to run only during off-peak electric demand periods.
§ 110.5	**Pilot Light.** Natural gas pool and spa heaters must not have a continuously burning pilot light.
§ 150.0(p)	**Pool Systems and Equipment Installation.** Residential pool systems or equipment must meet the specified requirements for pump sizing, flow rate, piping, filters, and valves. *

Lighting:

§ 110.9	**Lighting Controls and Components.** All lighting control devices and systems, ballasts, and luminaires must meet the applicable requirements of § 110.9. *
§ 150.0(k)1A	**Luminaire Efficacy.** All installed luminaires must meet the requirements in Table 150.0-A, except lighting integral to exhaust fans, kitchen range hoods, bath vanity mirrors, and garage door openers; navigation lighting less than 5 watts; and lighting internal to drawers, cabinets, and linen closets with an efficacy of at least 45 lumens per watt.
§ 150.0(k)1B	**Screw based luminaires.** Screw based luminaires must contain lamps that comply with Reference Joint Appendix JA8. *
§ 150.0(k)1C	**Recessed Downlight Luminaires in Ceilings.** Luminaires recessed into ceilings must not contain screw based sockets, must be airtight, and must be sealed with a gasket or caulk. California Electrical Code § 410.116 must also be met.
§ 150.0(k)1D	**Light Sources in Enclosed or Recessed Luminaires.** Lamps and other separable light sources that are not compliant with the JA8 elevated temperature requirements, including marking requirements, must not be installed in enclosed or recessed luminaires.
§ 150.0(k)1E	**Blank Electrical Boxes.** The number of electrical boxes that are more than five feet above the finished floor and do not contain a luminaire or other device shall be no more than the number of bedrooms. These boxes must be served by a dimmer, vacancy sensor control, low voltage wiring, or fan speed control.
§ 150.0(k)1F	**Lighting Integral to Exhaust Fans.** Lighting integral to exhaust fans (except when installed by the manufacturer in kitchen exhaust hoods) must meet the applicable requirements of § 150.0(k). *

5/6/22

2022 Single-Family Residential Mandatory Requirements Summary

§ 150.0(k)1G	**Screw based luminaires.** Screw based luminaires must contain lamps that comply with Reference Joint Appendix JA8. *
§ 150.0(k)1H	**Light Sources in Enclosed or Recessed Luminaires.** Lamps and other separable light sources that are not compliant with the JA8 elevated temperature requirements, including marking requirements, must not be installed in enclosed or recessed luminaires.
§ 150.0(k)1I	**Light Sources in Drawers, Cabinets, and Linen Closets.** Light sources internal to drawers, cabinets or linen closets are not required to comply with Table 150.0-A or be controlled by vacancy sensors provided that they are rated to consume no more than 5 watts of power, emitting more than 150 lumens, and are equipped with controls that automatically turn the lighting off when the drawer, cabinet or linen closet is closed.
§ 150.0(k)2A	**Interior Switches and Controls.** All forward phase cut dimmers used with LED light sources must comply with NEMA SSL 7A.
§ 150.0(k)2E	**Interior Switches and Controls.** Exhaust fans must be controlled separately from lighting systems. *
§ 150.0(k)2A	**Accessible Controls.** Lighting must have readily accessible wall-mounted controls that allow the lighting to be manually turned on and off. *
§ 150.0(k)2E	**Multiple Controls.** Controls must not bypass a dimmer, occupant sensor, or vacancy sensor function if the dimmer or sensor is installed to comply with § 150.0(k).
§ 150.0(k)2C	**Mandatory Requirements.** Lighting controls must comply with the applicable requirements of § 110.9.
§ 150.0(k)2D	**Energy Management Control Systems.** An energy management control system (EMCS) may be used to comply with dimming, occupancy, and control requirements if it provides the functionality of the specified control per § 110.9 and the physical controls specified in § 150.0(k)2A.
§ 150.0(k)2E	**Automatic Shutoff Controls.** In bathrooms, garages, laundry rooms, utility rooms and walk-in closets, at least one installed luminaire must be controlled by an occupancy or vacancy sensor providing automatic off functionality. Lighting inside drawers and cabinets with opaque fronts or doors must have controls that turn the light off when the drawer or door is closed.
§ 150.0(k)2F	**Dimmers.** Lighting in habitable spaces (e.g., living rooms, dining rooms, kitchens, bedrooms, offices, etc.) must have readily accessible wall-mounted dimming controls that allow the lighting to be manually adjusted up and down. Forward phase cut dimmers controlling LED light sources in these spaces must comply with NEMA SSL 7A.
§ 150.0(k)2K	**Independent controls.** Integrated lighting of exhaust fans shall be controlled independently from the fans. Lighting under cabinets or shelves, lighting in display cabinets, and switched outlets must be controlled separately from ceiling-installed lighting.
§ 150.0(k)3A	**Residential Outdoor Lighting.** For single-family residential buildings, outdoor lighting permanently mounted to a residential building, or to other buildings on the same lot, must have a manual on/off switch and either a photocell and motion sensor or automatic time switch control, or an astronomical time clock. An energy management control system that provides the specified control functionality and meets all applicable requirements may be used to meet these requirements.
§ 150.0(k)4	**Internally illuminated address signs.** Internally illuminated address signs must either comply with § 140.8 or consume no more than 5 watts of power.
§ 150.0(k)5	**Residential Garages for Eight or More Vehicles.** Lighting for residential parking garages for eight or more vehicles must comply with the applicable requirements for nonresidential garages in §§ 110.9, 130.0, 130.1, 130.4, 140.6, and 141.0.

Solar Readiness:

§ 110.10(a)1	**Single-family Residences.** Single-family residences located in subdivisions with 10 or more single-family residences and where the application for a tentative subdivision map for the residences has been deemed complete and approved by the enforcement agency, which do not have a photovoltaic system installed, must comply with the requirements of § 110.10(b)-(e).
§ 110.10(b)1A	**Minimum Solar Zone Area.** The solar zone must have a minimum total area as described below. The solar zone must comply with access, pathway, smoke ventilation, and spacing requirements as specified in Title 24, Part 9 or other parts of Title 24 or in any requirements adopted by a local jurisdiction. The solar zone total area must be composed of areas that have no dimension less than 5 feet and are no less than 80 square feet each for buildings with roof areas less than or equal to 10,000 square feet or no less than 160 square feet each for buildings with roof areas greater than 10,000 square feet. For single-family residences, the solar zone must be located on the roof or overhang of the building and have a total area no less than 250 square feet. *
§ 110.10(b)2	**Azimuth.** All sections of the solar zone located on sloped roofs must have an azimuth between 90-300° of true north.
§ 110.10(b)3A	**Shading.** The solar zone must not contain any obstructions, including but not limited to: vents, chimneys, architectural features, and roof mounted equipment.
§ 110.10(b)3B	**Shading.** Any obstruction located on the roof or any other part of the building that projects above a solar zone must be located at least twice the horizontal distance of the height difference between the highest point of the obstruction and the horizontal projection of the nearest point of the solar zone, measured in the vertical plane. *
§ 110.10(b)4	**Structural Design Loads on Construction Documents.** For areas of the roof designated as a solar zone, the structural design loads for roof dead load and roof live load must be clearly indicated on the construction documents.
§ 110.10(c)	**Interconnection Pathways.** The construction documents must indicate a location reserved for inverters and metering equipment and a pathway reserved for routing of conduit from the solar zone to the point of interconnection with the electrical service; and for single-family residences and central water-heating systems, a pathway reserved for routing plumbing from the solar zone to the water-heating system.
§ 110.10(d)	**Documentation.** A copy of the construction documents or a comparable document indicating the information from § 110.10(b)-(c) must be provided to the occupant.
§ 110.10(e)1	**Main Electrical Service Panel.** The main electrical service panel must have a minimum busbar rating of 200 amps.
§ 110.10(e)2	**Main Electrical Service Panel.** The main electrical service panel must have a reserved space to allow for the installation of a double pole circuit breaker for a future solar electric installation. The reserved space must be permanently marked as "For Future Solar Electric."

Electric and Energy Storage Ready:

5/6/22

2022 Single-Family Residential Mandatory Requirements Summary

§ 150.0(s)	**Energy Storage System (ESS) Ready.** All single-family residences must meet all of the following: Either ESS-ready interconnection equipment with backed up capacity of 60 amps or more and four or more ESS supplies branch circuits, or a dedicated raceway from the main service to a subpanel that supplies the branch circuits in § 150.0(s), at least four branch circuits must be identified and have their source collocated at a single panelboard suitable to be supplied by the ESS, with one circuit supplying the refrigerator, one lighting circuit near the primary exit, and one circuit supplying a sleeping room receptacle outlet; main panelboard must have a minimum busbar rating of 225 amps; sufficient space must be reserved to allow future installation of a system isolation equipment transfer switch within 3' of the main panelboard; with raceways installed between the panelboard and the switch location to allow the connection of backup power source.
§ 150.0(t)	**Heat Pump Space Heater Ready.** Systems using gas or propane furnaces to serve individual dwelling units must include: A dedicated unobstructed 240V branch circuit wiring installed within 3' of the furnace with circuit conductors rated at least 30 amps with the blank cover identified as "240V ready;" and a reserved main electrical service panel space to allow for the installation of a double pole circuit breaker permanently marked as "For Future 240V use."
§ 150.0(u)	**Electric Cooktop Ready.** Systems using gas or propane cooktop to serve individual dwelling units must include: A dedicated unobstructed 240V branch circuit wiring installed within 3' of the cooktop with circuit conductors rated at least 50 amps with the blank cover identified as "240V ready", and a reserved main electrical service panel space to allow for the installation of a double pole circuit breaker permanently marked as "For Future 240V use."
§ 150.0(v)	**Electric Clothes Dryer Ready.** Clothes dryer locations with gas or propane plumbing to serve individual dwelling units must include: A dedicated unobstructed 240V branch circuit wiring installed within 3' of the dryer location with circuit conductors rated at least 30 amps with the blank cover identified as "240V ready", and a reserved main electrical service panel space to allow for the installation of a double pole circuit breaker permanently marked as "For Future 240V use."

***Exceptions may apply.**

REVISIONS

1	
2	
3	
4	
5	
6	
7	
8	

SOUTH BAY DESIGN
DBA
ALEX VALLES
PRINCIPAL/OWNER
P.O. BOX 339
SAN JUAN BAUTISTA, CA 95045
831.207.9677
sbdesign27@yahoo.com

ADDITION/REMODEL
JIMENEZ FAMILY
701 3RD ST.
SAN JUAN BAUTISTA, CA 95045

MANDATORY MEASURES

DRAWN BY A.V.
CHECKED
DATE 10.14.22
SCALE
JOB NO.
SHEET MM

2022 CALIFORNIA GREEN BUILDING STANDARDS CODE
RESIDENTIAL MANDATORY MEASURES, SHEET 1 (January 2023)

Y = YES
N/A = NOT APPLICABLE
RESPON. PARTY = RESPONSIBLE PARTY (ie: ARCHITECT, ENGINEER, OWNER, CONTRACTOR, INSPECTOR ETC.)

CHAPTER 3
GREEN BUILDING
SECTION 301 GENERAL

301.1 SCOPE. Buildings shall be designed to include the green building measures specified as mandatory in the application checklists contained in this code. Voluntary green building measures are also included in the application checklists and may be included in the design and construction of structures covered by this code, but are not required unless adopted by a city, county, or city and county as specified in Section 101.7.

301.1.1 Additions and alterations. [HCD] The mandatory provisions of Chapter 4 shall be applied to additions or alterations of existing residential buildings where the addition or alteration increases the building's conditioned area, volume, or size. The requirements shall apply only to and/or within the specific area of the addition or alteration.

The mandatory provision of Section 4.106.4.2 may apply to additions or alterations of existing parking facilities or the addition of new parking facilities serving existing multifamily buildings. See Section 4.106.4.3 for application.

Note: Repairs including, but not limited to, resurfacing, restriping and repairing or maintaining existing lighting fixtures are not considered alterations for the purpose of this section.

Note: On and after January 1, 2014, residential buildings undergoing permitted alterations, additions, or improvements shall replace noncompliant plumbing fixtures with water-conserving plumbing fixtures. Plumbing fixture replacement is required prior to issuance of a certificate of final completion, certificate of occupancy or final permit approval by the local building department. See Civil Code Section 1101.1, et seq., for the definition of a noncompliant plumbing fixture, types of residential buildings affected and other important enactment dates.

301.2 LOW-RISE AND HIGH-RISE RESIDENTIAL BUILDINGS. [HCD] The provisions of individual sections of CALGreen may apply to either low-rise residential buildings high-rise residential buildings, or both. Individual sections will be designated by banners to indicate where the section applies specifically to low-rise only (LR) or high-rise only (HR). When the section applies to both low-rise and high-rise buildings, no banner will be used.

SECTION 302 MIXED OCCUPANCY BUILDINGS

302.1 MIXED OCCUPANCY BUILDINGS. In mixed occupancy buildings, each portion of a building shall comply with the specific green building measures applicable to each specific occupancy.
Exceptions:
1. [HCD] Accessory structures and accessory occupancies serving residential buildings shall comply with Chapter 4 and Appendix A4, as applicable.
2. [HCD] For purposes of *CALGreen*, live/work units, complying with Section 419 of the *California Building Code*, shall not be considered mixed occupancies. Live/Work units shall comply with Chapter 4 and Appendix A4, as applicable.

DIVISION 4.1 PLANNING AND DESIGN

ABBREVIATION DEFINITIONS:

HCD	Department of Housing and Community Development
BSC	California Building Standards Commission
DSA-SS	Division of the State Architect, Structural Safety
OSHPD	Office of Statewide Health Planning and Development
LR	Low Rise
HR	High Rise
AA	Additions and Alterations
N	New

CHAPTER 4
RESIDENTIAL MANDATORY MEASURES

SECTION 4.102 DEFINITIONS
4.102.1 DEFINITIONS
The following terms are defined in Chapter 2 *(and are included here for reference)*

FRENCH DRAIN. A trench, hole or other depressed area loosely filled with rock, gravel, fragments of brick or similar pervious material used to collect or channel drainage or runoff water.

WATTLES. Wattles are used to reduce sediment in runoff. Wattles are often constructed of natural plant materials such as hay, straw or similar material shaped in the form of tubes and placed on a downflow slope. Wattles are also used for perimeter and inlet controls.

4.106 SITE DEVELOPMENT
4.106.1 GENERAL. Preservation and use of available natural resources shall be accomplished through evaluation and careful planning to minimize negative effects on the site and adjacent areas. Preservation of slopes, management of storm water drainage and erosion controls shall comply with this section.

4.106.2 STORM WATER DRAINAGE AND RETENTION DURING CONSTRUCTION. Projects which disturb less than one acre of soil and are not part of a larger common plan of development which in total disturbs one acre or more, shall manage storm water drainage during construction. In order to manage storm water drainage during construction, one or more of the following measures shall be implemented to prevent flooding of adjacent property, prevent erosion and retain soil runoff on the site.

1. Retention basins of sufficient size shall be utilized to retain storm water on the site.
2. Where storm water is conveyed to a public drainage system, collection point, gutter or similar disposal method, water shall be filtered by use of a barrier system, wattle or other method approved by the enforcing agency.
3. Compliance with a lawfully enacted storm water management ordinance.

Note: Refer to the State Water Resources Control Board for projects which disturb one acre or more of soil, or are part of a larger common plan of development which in total disturbs one acre or more of soil.

(Website: https://www.waterboards.ca.gov/water_issues/programs/stormwater/construction.html)

4.106.3 GRADING AND PAVING. Construction plans shall indicate how the site grading or drainage system will manage all surface water flows to keep water from entering buildings. Examples of methods to manage surface water include, but are not limited to, the following:

1. Swales
2. Water collection and disposal systems
3. French drains
4. Water retention gardens
5. Other water measures which keep surface water away from buildings and aid in groundwater recharge.

Exception: Additions and alterations not altering the drainage path.

4.106.4 Electric vehicle (EV) charging for new construction. New construction shall comply with Sections 4.106.4.1 or 4.106.4.2 to facilitate future installation and use of EV chargers. Electric vehicle supply equipment (EVSE) shall be installed in accordance with the *California Electrical Code,* Article 625.

Exceptions:
1. On a case-by-case basis, where the local enforcing agency has determined EV charging and infrastructure are not feasible based upon one or more of the following conditions:
   1.1 Where there is no local utility power supply or the local utility is unable to supply adequate power.
   1.2 Where there is evidence suitable to the local enforcing agency substantiating that additional local utility infrastructure design requirements, directly related to the implementation of Section 4.106.4, may adversely impact the construction cost of the project.
2. Accessory Dwelling Units (ADU) and Junior Accessory Dwelling Units (JADU) without additional parking facilities.

4.106.4.1 New one- and two-family dwellings and townhouses with attached private garages. For each dwelling unit, install a listed raceway to accommodate a dedicated 208/240-volt branch circuit. The raceway shall not be less than trade size 1 (nominal 1-inch inside diameter). The raceway shall originate at the main service or subpanel and shall terminate into a listed cabinet, box or other enclosure in close proximity to the proposed location of an EV charger. Raceways are required to be continuous at enclosed, inaccessible or concealed areas and spaces. The service panel and/or subpanel shall provide capacity to install a 40-ampere 208/240-volt minimum dedicated branch circuit and space(s) reserved to permit installation of a branch circuit overcurrent protective device.

Exemption: A raceway is not required if a minimum 40-ampere 208/240-volt dedicated EV branch circuit is installed in close proximity to the proposed location of an EV charger at the time of original construction in accordance with the *California Electrical Code.*

4.106.4.1.1 Identification. The service panel or subpanel circuit directory shall identify the overcurrent protective device space(s) reserved for future EV charging as "EV CAPABLE". The raceway termination location shall be permanently and visibly marked as "EV CAPABLE".

4.106.4.2 New multifamily dwellings, hotels and motels and new residential parking facilities.
When parking is provided, parking spaces for new multifamily dwellings, hotels and motels shall meet the requirements of Sections 4.106.4.2.1 and 4.106.4.2.2. Calculations for spaces shall be rounded up to the nearest whole number. A parking space served by electric vehicle supply equipment or designed as a future EV charging space shall count as at least one standard automobile parking space only for the purpose of complying with any applicable minimum parking space requirements established by a local jurisdiction. See Vehicle Code Section 22511.2 for further details.

4.106.4.2.1Multifamily development projects with less than 20 dwelling units; and hotels and motels with less than 20 sleeping units or guest rooms.
The number of dwelling units, sleeping units or guest rooms shall be based on all buildings on a project site subject to this section.

1.EV Capable. Ten (10) percent of the total number of parking spaces on a building site, provided for all types of parking facilities, shall be electric vehicle charging spaces (EV spaces) capable of supporting future Level 2 EVSE. Electrical load calculations shall demonstrate that the electrical panel service capacity and electrical system, including any on-site distribution transformer(s), have sufficient capacity to simultaneously charge all EVs at all required EV spaces at a minimum of 40 amperes.

The service panel or subpanel circuit directory shall identify the overcurrent protective device space(s) reserved for future EV charging purposes as "EV CAPABLE" in accordance with the California Electrical Code.

Exceptions:

1.When EV chargers (Level 2 EVSE) are installed in a number equal to or greater than the required number of EV capable spaces.

2.When EV chargers (Level 2 EVSE) are installed in a number less than the required number of EV capable spaces, the number of EV capable spaces required may be reduced by a number equal to the number of EV chargers installed.

Notes:

a.Construction documents are intended to demonstrate the project's capability and capacity for facilitating future EV charging.

b.There is no requirement for EV spaces to be constructed or available until receptacles for EV charging or EV chargers are installed for use.

2.EV Ready. Twenty-five (25) percent of the total number of parking spaces shall be equipped with low power Level 2 EV charging receptacles. For multifamily parking facilities, no more than one receptacle is required per dwelling unit when more than one parking space is provided for use by a single dwelling unit.

Exception: Areas of parking facilities served by parking lifts.

4.106.4.2.2 Multifamily development projects with 20 or more dwelling units, hotels and motels with 20 or more sleeping units or guest rooms.
The number of dwelling units, sleeping units or guest rooms shall be based on all buildings on a project site subject to this section.

1.EV Capable. Ten (10) percent of the total number of parking spaces on a building site, provided for all types of parking facilities, shall be electric vehicle charging spaces (EV spaces) capable of supporting future Level 2 EVSE. Electrical load calculations shall demonstrate that the electrical panel service capacity and electrical system, including any on-site distribution transformer(s), have sufficient capacity to simultaneously charge all EVs at all required EV spaces at a minimum of 40 amperes.

The service panel or subpanel circuit directory shall identify the overcurrent protective device space(s) reserved for future EV charging purposes as "EV CAPABLE" in accordance with the California Electrical Code.

Exception: When EV chargers (Level 2 EVSE) are installed in a number greater than five (5) percent of parking spaces required by Section 4.106.4.2.2, Item 3, the number of EV capable spaces required may be reduced by a number equal to the number of EV chargers installed over the five (5) percent required.

Notes:

a.Construction documents shall show locations of future EV spaces.

b.There is no requirement for EV spaces to be constructed or available until receptacles for EV charging or EV chargers are installed for use.

2.EV Ready. Twenty-five (25) percent of the total number of parking spaces shall be equipped with low power Level 2 EV charging receptacles. For multifamily parking facilities, no more than one receptacle is required per dwelling unit when more than one parking space is provided for use by a single dwelling unit.

Exception: Areas of parking facilities served by parking lifts.

3.EV Chargers. Five (5) percent of the total number of parking spaces shall be equipped with Level 2 EVSE. Where common use parking is provided, at least one EV charger shall be located in the common use parking area and shall be available for use by all residents or guests.

When low power Level 2 EV charging receptacles or Level 2 EVSE are installed beyond the minimum required, an automatic load management system (ALMS) may be used to reduce the maximum required electrical capacity to each space served by the ALMS. The electrical system and any on-site distribution transformers shall have sufficient capacity to deliver at least 3.3 kW simultaneously to each EV charging station (EVCS) served by the ALMS. The branch circuit shall have a minimum capacity of 40 amperes, and installed EVSE shall have a capacity of not less than 30 amperes. ALMS shall not be used to reduce the minimum required electrical capacity to the required EV capable spaces.

4.106.4.2.2.1 Electric vehicle charging stations (EVCS).
Electric vehicle charging stations required by Section 4.106.4.2.2, Item 3, shall comply with Section 4.106.4.2.2.1.

Exception: Electric vehicle charging stations serving public accommodations, public housing, motels and hotels shall not be required to comply with this section. See California Building Code, Chapter 11B, for applicable requirements.

4.106.4.2.2.1.1 Location.
EVCS shall comply with at least one of the following options:

1.The charging space shall be located adjacent to an accessible parking space meeting the requirements of the California Building Code, Chapter 11A, to allow use of the EV charger from the accessible parking space.

2.The charging space shall be located on an accessible route, as defined in the California Building Code, Chapter 2, to the building.

Exception: Electric vehicle charging stations designed and constructed in compliance with the California Building Code, Chapter 11B, are not required to comply with Section 4.106.4.2.2.1.1 and Section 4.106.4.2.2.1.2, Item 3.

4.106.4.2.2.1.2 Electric vehicle charging stations (EVCS) dimensions.
The charging spaces shall be designed to comply with the following:

1.The minimum length of each EV space shall be 18 feet (5486 mm).

2.The minimum width of each EV space shall be 9 feet (2743 mm).

3.One in every 25 charging spaces, but not less than one, shall also have an 8-foot (2438 mm) wide minimum aisle. A 5-foot (1524 mm) wide minimum aisle shall be permitted provided the minimum width of the EV space is 12 feet (3658 mm).

a.Surface slope for this EV space and the aisle shall not exceed 1 unit vertical in 48 units horizontal (2.083 percent slope) in any direction.

4.106.4.2.2.1.3 Accessible EV spaces.
In addition to the requirements in Sections 4.106.4.2.2.1.1 and 4.106.4.2.2.1.2, all EVSE, when installed, shall comply with the accessibility provisions for EV chargers in the California Building Code, Chapter 11B. EV ready spaces and EVCS in multifamily developments shall comply with California Building Code, Chapter 11A, Section 1109A.

4.106.4.2.3 EV space requirements.
1.Single EV space required. Install a listed raceway capable of accommodating a 208/240-volt dedicated branch circuit. The raceway shall not be less than trade size 1 (nominal 1-inch inside diameter). The raceway shall originate at the main service or subpanel and shall terminate into a listed cabinet, box or enclosure in close proximity to the location or the proposed location of the EV space. Construction documents shall identify the raceway termination point, receptacle or charger location, as applicable. The service panel and/ or subpanel shall have a 40-ampere minimum dedicated branch circuit, including branch circuit overcurrent protective device installed, or space(s) reserved to permit installation of a branch circuit overcurrent protective device.

Exception: A raceway is not required if a minimum 40-ampere 208/240-volt dedicated EV branch circuit is installed in close proximity to the location or the proposed location of the EV space, at the time of original construction in accordance with the California Electrical Code.

2.Multiple EV spaces required. Construction documents shall indicate the raceway termination point and the location of installed or future EV spaces, receptacles or EV chargers. Construction documents shall also provide information on amperage of installed or future receptacles or EVSE, raceway method(s), wiring schematics and electrical load calculations. Plan design shall be based upon a 40-ampere minimum branch circuit. Required raceways and related components that are planned to be installed underground, enclosed, inaccessible or in concealed areas and spaces shall be installed at the time of original construction.

Exception: A raceway is not required if a minimum 40-ampere 208/240-volt dedicated EV branch circuit is installed in close proximity to the location or the proposed location of the EV space at the time of original construction in accordance with the California Electrical Code.

4.106.4.2.4 Identification.
The service panel or subpanel circuit directory shall identify the overcurrent protective device space(s) reserved for future EV charging purposes as "EV CAPABLE" in accordance with the California Electrical Code.

4.106.4.2.5 Electric Vehicle Ready Space Signage.
Electric vehicle ready spaces shall be identified by signage or pavement markings, in compliance with Caltrans Traffic Operations Policy Directive 13-01 (Zero Emission Vehicle Signs and Pavement Markings) or its successor(s).

4.106.4.3 Electric vehicle charging for additions and alterations of parking facilities serving existing multifamily buildings.
When new parking facilities are added, or electrical systems or lighting of existing parking facilities are added or altered and the work requires a building permit, ten (10) percent of the total number of parking spaces added or altered shall be electric vehicle charging spaces (EV spaces) capable of supporting future Level 2 EVSE.

Notes:

1.Construction documents are intended to demonstrate the project's capability and capacity for facilitating future EV charging.

2.There is no requirement for EV spaces to be constructed or available until EV chargers are installed for use.

DIVISION 4.2 ENERGY EFFICIENCY

4.201 GENERAL
4.201.1 SCOPE. For the purposes of mandatory energy efficiency standards in this code, the California Energy Commission will continue to adopt mandatory standards.

DIVISION 4.3 WATER EFFICIENCY AND CONSERVATION

4.303 INDOOR WATER USE
4.303.1 WATER CONSERVING PLUMBING FIXTURES AND FITTINGS. Plumbing fixtures (water closets and urinals) and fittings (faucets and showerheads) shall comply with the sections 4.303.1.1, 4.303.1.2, 4.303.1.3, and 4.303.4.4.

Note: All noncompliant plumbing fixtures in any residential real property shall be replaced with water-conserving plumbing fixtures. Plumbing fixture replacement is required prior to issuance of a certificate of final completion, certificate of occupancy, or final permit approval by the local building department. See Civil Code Section 1101.1, et seq., for the definition of a noncompliant plumbing fixture, types of residential buildings affected and other important enactment dates.

4.303.1.1 Water Closets. The effective flush volume of all water closets shall not exceed 1.28 gallons per flush. Tank-type water closets shall be certified to the performance criteria of the U.S. EPA WaterSense Specification for Tank-type Toilets.

Note: The effective flush volume of dual flush toilets is defined as the composite, average flush volume of two reduced flushes and one full flush.

4.303.1.2 Urinals. The effective flush volume of wall mounted urinals shall not exceed 0.125 gallons per flush. The effective flush volume of all other urinals shall not exceed 0.5 gallons per flush.

4.303.1.3 Showerheads.

4.303.1.3.1 Single Showerhead. Showerheads shall have a maximum flow rate of not more than 1.8 gallons per minute at 80 psi. Showerheads shall be certified to the performance criteria of the U.S. EPA WaterSense Specification for Showerheads.

4.303.1.3.2 Multiple showerheads serving one shower. When a shower is served by more than one showerhead, the combined flow rate of all the showerheads and/or other shower outlets controlled by a single valve shall not exceed 1.8 gallons per minute at 80 psi, or the shower shall be designed to only allow one shower outlet to be in operation at a time.

Note: A hand-held shower shall be considered a showerhead.

4.303.1.4 Faucets.

4.303.1.4.1 Residential Lavatory Faucets. The maximum flow rate of residential lavatory faucets shall not exceed 1.2 gallons per minute at 60 psi. The minimum flow rate of residential lavatory faucets shall not be less than 0.8 gallons per minute at 20 psi.

4.303.1.4.2 Lavatory Faucets in Common and Public Use Areas. The maximum flow rate of lavatory faucets installed in common and public use areas (outside of dwellings or sleeping units) in residential buildings shall not exceed 0.5 gallons per minute at 60 psi.

4.303.1.4.3 Metering Faucets. Metering faucets when installed in residential buildings shall not deliver more than 0.2 gallons per cycle.

4.303.1.4.4 Kitchen Faucets. The maximum flow rate of kitchen faucets shall not exceed 1.8 gallons per minute at 60 psi. Kitchen faucets may temporarily increase the flow above the maximum rate, but not to exceed 2.2 gallons per minute at 60 psi, and must default to a maximum flow rate of 1.8 gallons per minute at 60 psi.

Note: Where complying faucets are unavailable, aerators or other means may be used to achieve reduction.

4.303.1.4.5 Pre-rinse spray valves.
When installed, shall meet the requirements in the *California Code of Regulations*, Title 20 (Appliance Efficiency Regulations), Sections 1605.1 (h)(4) Table H-2, Section 1605.3 (h)(4)(A), and Section 1607 (d)(7) and shall be equipped with an integral automatic shutoff.

FOR REFERENCE ONLY: The following table and code section have been reprinted from the *California Code of Regulations*, Title 20 (Appliance Efficiency Regulations),Section 1605.1 (h)(4) and Section 1605.3 (h)(4)(A).

TABLE H-2

STANDARDS FOR COMMERCIAL PRE-RINSE SPRAY VALUES MANUFACTURED ON OR AFTER JANUARY 28, 2019

PRODUCT CLASS [spray force in ounce force (ozf)]	MAXIMUM FLOW RATE (gpm)
Product Class 1 (≤ 5.0 ozf)	1.00
Product Class 2 (> 5.0 ozf and ≤ 8.0 ozf)	1.20
Product Class 3 (> 8.0 ozf)	1.28

Title 20 Section 1605.3 (h)(4)(A): Commercial prerinse spray values manufactured on or after January 1, 2006, shall have a minimum spray force of not less than 4.0 ounces-force (ozf)[113 grams-force(gf)]

4.303.2 Submeters for multifamily buildings and dwelling units in mixed-used residential/commercial buildings.
Submeters shall be installed to measure water usage of individual rental dwelling units in accordance with the *California Plumbing Code.*

4.303.3 Standards for plumbing fixtures and fittings. Plumbing fixtures and fittings shall be installed in accordance with the *California Plumbing Code*, and shall meet the applicable standards referenced in Table 1701.1 of the *California Plumbing Code*.

NOTE:
THIS TABLE COMPILES THE DATA IN SECTION 4.303.1, AND IS INCLUDED AS A CONVENIENCE FOR THE USER.

TABLE - MAXIMUM FIXTURE WATER USE

FIXTURE TYPE	FLOW RATE
SHOWER HEADS (RESIDENTIAL)	1.8 GMP @ 80 PSI
LAVATORY FAUCETS (RESIDENTIAL)	MAX. 1.2 GPM @ 60 PSI MIN. 0.8 GPM @ 20 PSI
LAVATORY FAUCETS IN COMMON & PUBLIC USE AREAS	0.5 GPM @ 60 PSI
KITCHEN FAUCETS	1.8 GPM @ 60 PSI
METERING FAUCETS	0.2 GAL/CYCLE
WATER CLOSET	1.28 GAL/FLUSH
URINALS	0.125 GAL/FLUSH

4.304 OUTDOOR WATER USE
4.304.1 OUTDOOR POTABLE WATER USE IN LANDSCAPE AREAS. Residential developments shall comply with a local water efficient landscape ordinance or the current California Department of Water Resources' Model Water Efficient Landscape Ordinance (MWELO), whichever is more stringent.

NOTES:

1. The Model Water Efficient Landscape Ordinance (MWELO) is located in the *California Code Regulations,* Title 23, Chapter 2.7, Division 2. MWELO and supporting documents, including water budget calculator, are available at: https://www.water.ca.gov/

DIVISION 4.4 MATERIAL CONSERVATION AND RESOURCE EFFICIENCY

4.406 ENHANCED DURABILITY AND REDUCED MAINTENANCE
4.406.1 RODENT PROOFING. Annular spaces around pipes, electric cables, conduits or other openings in sole/bottom plates at exterior walls shall be protected against the passage of rodents by closing such openings with cement mortar, concrete masonry or a similar method acceptable to the enforcing agency.

4.408 CONSTRUCTION WASTE REDUCTION, DISPOSAL AND RECYCLING
4.408.1 CONSTRUCTION WASTE MANAGEMENT. Recycle and/or salvage for reuse a minimum of 65 percent of the non-hazardous construction and demolition waste in accordance with either Section 4.408.2, 4.408.3 or 4.408.4, or meet a more stringent local construction and demolition waste management ordinance.

Exceptions:

1. Excavated soil and land-clearing debris.
2. Alternate waste reduction methods developed by working with local agencies if diversion or recycle facilities capable of compliance with this item do not exist or are not located reasonably close to the jobsite.
3. The enforcing agency may make exceptions to the requirements of this section when isolated jobsites are located in areas beyond the haul boundaries of the diversion facility.

4.408.2 CONSTRUCTION WASTE MANAGEMENT PLAN. Submit a construction waste management plan in conformance with Items 1 through 5. The construction waste management plan shall be updated as necessary and shall be available during construction for examination by the enforcing agency.

1. Identify the construction and demolition waste materials to be diverted from disposal by recycling, reuse on the project or salvage for future use or sale.
2. Specify if construction and demolition waste materials will be sorted on-site (source separated) or bulk mixed (single stream).
3. Identify diversion facilities where the construction and demolition waste material collected will be taken.
4. Identify construction methods employed to reduce the amount of construction and demolition waste generated.
5. Specify that the amount of construction and demolition waste materials diverted shall be calculated by weight or volume, but not by both.

4.408.3 WASTE MANAGEMENT COMPANY. Utilize a waste management company, approved by the enforcing agency, which can provide verifiable documentation that the percentage of construction and demolition waste material diverted from the landfill complies with Section 4.408.1.

Note: The owner or contractor may make the determination if the construction and demolition waste materials will be diverted by a waste management company.

4.408.4 WASTE STREAM REDUCTION ALTERNATIVE [LR]. Projects that generate a total combined weight of construction and demolition waste disposed of in landfills, which do not exceed 3.4 lbs./sq.ft. of the building area shall meet the minimum 65% construction waste reduction requirement in Section 4.408.1

4.408.4.1 WASTE STREAM REDUCTION ALTERNATIVE. Projects that generate a total combined weight of construction and demolition waste disposed of in landfills, which do not exceed 2 pounds per square foot of the building area, shall meet the minimum 65% construction waste reduction requirement in Section 4.408.1

4.408.5 DOCUMENTATION. Documentation shall be provided to the enforcing agency which demonstrates compliance with Section 4.408.2, items 1 through 5, Section 4.408.3 or Section 4.408.4..

Notes:

1. Sample forms found in "A Guide to the California Green Building Standards Code (Residential)" located at www.hcd.ca.gov/CALGreen.html may be used to assist in documenting compliance with this section.
2. Mixed construction and demolition debris (C & D) processors can be located at the California Department of Resources Recycling and Recovery (CalRecycle).

4.410 BUILDING MAINTENANCE AND OPERATION
4.410.1 OPERATION AND MAINTENANCE MANUAL. At the time of final inspection, a manual, compact disc, web-based reference or other media acceptable to the enforcing agency which includes all of the following shall be placed in the building:

1. Directions to the owner or occupant that the manual shall remain with the building throughout the life cycle of the structure.
2. Operation and maintenance instructions for the following:
   a. Equipment and appliances, including water-saving devices and systems, HVAC systems, photovoltaic systems, electric vehicle chargers, water-heating systems and other major appliances and equipment.
   b. Roof and yard drainage, including gutters and downspouts.
   c. Space conditioning systems, including condensers and air filters.
   d. Landscape irrigation systems.
   e. Water reuse systems.
3. Information from local utility, water and waste recovery providers on methods to further reduce resource consumption, including recycle programs and locations.
4. Public transportation and/or carpool options available in the area.
5. Educational material on the positive impacts of an interior relative humidity between 30-60 percent and what methods an occupant may use to maintain the relative humidity level in that range.
6. Information about water-conserving landscape and irrigation design and controllers which conserve water.
7. Instructions for maintaining gutters and downspouts and the importance of diverting water at least 5 feet away from the foundation.
8. Information on required routine maintenance measures, including, but not limited to, caulking, painting, grading around the building, etc.
9. Information about state solar energy and incentive programs available.
10. A copy of all special inspections verifications required by the enforcing agency or this code.
11. Information from the Department of Forestry and Fire Protection on maintenance of defensible space around residential structures.
12. Information and/or drawings identifying the location of grab bar reinforcements.

4.410.2 RECYCLING BY OCCUPANTS. Where 5 or more multifamily dwelling units are constructed on a building site, provide readily accessible area(s) that serves all buildings on the site and are identified for the depositing, storage and collection of non-hazardous materials for recycling, including (at a minimum) paper, corrugated cardboard, glass, plastics, organic waster, and metals, or meet a lawfully enacted local recycling ordinance, if more restrictive.

Exception: Rural jurisdictions that meet and apply for the exemption in Public Resources Code Section 42649.82 (a)(2)(A) et seq. are note required to comply with the organic waste portion of this section.

DIVISION 4.5 ENVIRONMENTAL QUALITY

SECTION 4.501 GENERAL
4.501.1 Scope
The provisions of this chapter shall outline means of reducing the quality of air contaminants that are odorous, irritating and/or harmful to the comfort and well being of a building's installers, occupants and neighbors.

SECTION 4.502 DEFINITIONS
5.102.1 DEFINITIONS
The following terms are defined in Chapter 2 *(and are included here for reference)*

AGRIFIBER PRODUCTS. Agrifiber products include wheatboard, strawboard, panel substrates and door cores, not including furniture, fixtures and equipment (FF&E) not considered base building elements.

COMPOSITE WOOD PRODUCTS. Composite wood products include hardwood plywood, particleboard and medium density fiberboard. "Composite wood products" does not include hardboard, structural plywood, structural panels, structural composite lumber, oriented strand board, glued laminated timber, prefabricated wood I-joists or finger-jointed lumber, all as specified in California Code of regulations (CCR), title 17, Section 93120.1.

DIRECT-VENT APPLIANCE. A fuel-burning appliance with a sealed combustion system that draws all air for combustion from the outside atmosphere and discharges all flue gases to the outside atmosphere.

DISCLAIMER: *THIS DOCUMENT IS PROVIDED AND INTENDED TO BE USED AS A MEANS TO INDICATE AREAS OF COMPLIANCE WITH THE CALIFORNIA GREEN BUILDING STANDARDS (CALGREEN) CODE. DUE TO THE VARIABLES BETWEEN BUILDING DEPARTMENT JURISDICTIONS, THIS CHECKLIST IS TO BE USED ON AN INDIVIDUAL PROJECT BASIS AND MAY BE MODIFIED BY THE END USER TO MEET THOSE INDIVIDUAL NEEDS. THE END USER ASSUMES ALL RESPONSIBILITY ASSOCIATED WITH THE USE OF THIS DOCUMENT, INCLUDING VERIFICATION WITH THE FULL CODE.*

Y N/A RESPON. PARTY

MAXIMUM INCREMENTAL REACTIVITY (MIR). The maximum change in weight of ozone formed by adding a compound to the "Base Reactive Organic Gas (ROG) Mixture" per weight of compound added, expressed to hundredths of a gram (g O^3/g ROC).
Note: MIR values for individual compounds and hydrocarbon solvents are specified in CCR, Title 17, Sections 94700 and 94701.

MOISTURE CONTENT. The weight of the water in wood expressed in percentage of the weight of the oven-dry wood.

PRODUCT-WEIGHTED MIR (PWMIR). The sum of all weighted-MIR for all ingredients in a product subject to this article. The PWMIR is the total product reactivity expressed to hundredths of a gram of ozone formed per gram of product (excluding container and packaging).
Note: PWMIR is calculated according to equations found in CCR, Title 17, Section 94521 (a).

REACTIVE ORGANIC COMPOUND (ROC). Any compound that has the potential, once emitted, to contribute to ozone formation in the troposphere.

VOC. A volatile organic compound (VOC) broadly defined as a chemical compound based on carbon chains or rings with vapor pressures greater than 0.1 millimeters of mercury at room temperature. These compounds typically contain hydrogen and may contain oxygen, nitrogen and other elements. See CCR Title 17, Section 94508(a).

4.503 FIREPLACES
4.503.1 GENERAL. Any installed gas fireplace shall be a direct-vent sealed-combustion type. Any installed woodstove or pellet stove shall comply with U.S. EPA New Source Performance Standards (NSPS) emission limits as applicable, and shall have a permanent label indicating they are certified to meet the emission limits. Woodstoves, pellet stoves and fireplaces shall also comply with applicable local ordinances.

4.504 POLLUTANT CONTROL
4.504.1 COVERING OF DUCT OPENINGS & PROTECTION OF MECHANICAL EQUIPMENT DURING CONSTRUCTION. At the time of rough installation, during storage on the construction site and until final startup of the heating, cooling and ventilating equipment, all duct and other related air distribution component openings shall be covered with tape, plastic, sheet metal or other methods acceptable to the enforcing agency to reduce the amount of water, dust or debris which may enter the system.

4.504.2 FINISH MATERIAL POLLUTANT CONTROL. Finish materials shall comply with this section.

4.504.2.1 Adhesives, Sealants and Caulks. Adhesives, sealant and caulks used on the project shall meet the requirements of the following standards unless more stringent local or regional air pollution or air quality management district rules apply:

1. Adhesives, adhesive bonding primers, adhesive primers, sealants, sealant primers and caulks shall comply with local or regional air pollution control or air quality management district rules where applicable or SCAQMD Rule 1168 VOC limits, as shown in Table 4.504.1 or 4.504.2, as applicable. Such products also shall comply with the Rule 1168 prohibition on the use of certain toxic compounds (chloroform, ethylene dichloride, methylene chloride, perchloroethylene and tricloroethylene), except for aerosol products, as specified in Subsection 2 below.

2. Aerosol adhesives, and smaller unit sizes of adhesives, and sealant or caulking compounds (in units of product, less packaging, which do not weigh more than 1 pound and do not consist of more than 16 fluid ounces) shall comply with statewide VOC standards and other requirements, including prohibitions on use of certain toxic compounds, of *California Code of Regulations*, Title 17, commencing with section 94507.

4.504.2.2 Paints and Coatings. Architectural paints and coatings shall comply with VOC limits in Table 1 of the ARB Architectural Suggested Control Measure, as shown in Table 4.504.3, unless more stringent local limits apply. The VOC content limit for coatings that do not meet the definitions for the specialty coatings categories listed in Table 4.504.3 shall be determined by classifying the coating as a Flat, Nonflat or Nonflat-High Gloss coating, based on its gloss, as defined in subsections 4.21, 4.36, and 4.37 of the 2007 California Air Resources Board, Suggested Control Measure, and the corresponding Flat, Nonflat or Nonflat-High Gloss VOC limit in Table 4.504.3 shall apply.

4.504.2.3 Aerosol Paints and Coatings. Aerosol paints and coatings shall meet the Product-weighted MIR Limits for ROC in Section 94522(a)(2) and other requirements, including prohibitions on use of certain toxic compounds and ozone depleting substances, in Sections 94522(e)(1) and (f)(1) of *California Code of Regulations*, Title 17, commencing with Section 94520; and in areas under the jurisdiction of the Bay Area Air Quality Management District additionally comply with the percent VOC by weight of product limits of Regulation 8, Rule 49.

4.504.2.4 Verification. Verification of compliance with this section shall be provided at the request of the enforcing agency. Documentation may include, but is not limited to, the following:

1. Manufacturer's product specification.
2. Field verification of on-site product containers.

TABLE 4.504.1 - ADHESIVE VOC LIMIT[1,2]

(Less Water and Less Exempt Compounds in Grams per Liter)

ARCHITECTURAL APPLICATIONS	VOC LIMIT
INDOOR CARPET ADHESIVES	50
CARPET PAD ADHESIVES	50
OUTDOOR CARPET ADHESIVES	150
WOOD FLOORING ADHESIVES	100
RUBBER FLOOR ADHESIVES	60
SUBFLOOR ADHESIVES	50
CERAMIC TILE ADHESIVES	65
VCT & ASPHALT TILE ADHESIVES	50
DRYWALL & PANEL ADHESIVES	50
COVE BASE ADHESIVES	50
MULTIPURPOSE CONSTRUCTION ADHESIVE	70
STRUCTURAL GLAZING ADHESIVES	100
SINGLE-PLY ROOF MEMBRANE ADHESIVES	250
OTHER ADHESIVES NOT LISTED	50
SPECIALTY APPLICATIONS	
PVC WELDING	510
CPVC WELDING	490
ABS WELDING	325
PLASTIC CEMENT WELDING	250
ADHESIVE PRIMER FOR PLASTIC	550
CONTACT ADHESIVE	80
SPECIAL PURPOSE CONTACT ADHESIVE	250
STRUCTURAL WOOD MEMBER ADHESIVE	140
TOP & TRIM ADHESIVE	250
SUBSTRATE SPECIFIC APPLICATIONS	
METAL TO METAL	30
PLASTIC FOAMS	50
POROUS MATERIAL (EXCEPT WOOD)	50
WOOD	30
FIBERGLASS	80

1. IF AN ADHESIVE IS USED TO BOND DISSIMILAR SUBSTRATES TOGETHER, THE ADHESIVE WITH THE HIGHEST VOC CONTENT SHALL BE ALLOWED.

2. FOR ADDITIONAL INFORMATION REGARDING METHODS TO MEASURE THE VOC CONTENT SPECIFIED IN THIS TABLE, SEE SOUTH COAST AIR QUALITY MANAGEMENT DISTRICT RULE 1168.

Y N/A RESPON. PARTY

TABLE 4.504.2 - SEALANT VOC LIMIT

(Less Water and Less Exempt Compounds in Grams per Liter)

SEALANTS	VOC LIMIT
ARCHITECTURAL	250
MARINE DECK	760
NONMEMBRANE ROOF	300
ROADWAY	250
SINGLE-PLY ROOF MEMBRANE	450
OTHER	420
SEALANT PRIMERS	
ARCHITECTURAL	
NON-POROUS	250
POROUS	775
MODIFIED BITUMINOUS	500
MARINE DECK	760
OTHER	750

TABLE 4.504.3 - VOC CONTENT LIMITS FOR ARCHITECTURAL COATINGS[1,2,3]

GRAMS OF VOC PER LITER OF COATING, LESS WATER & LESS EXEMPT COMPOUNDS

COATING CATEGORY	VOC LIMIT
FLAT COATINGS	50
NON-FLAT COATINGS	100
NONFLAT-HIGH GLOSS COATINGS	150
SPECIALTY COATINGS	
ALUMINUM ROOF COATINGS	400
BASEMENT SPECIALTY COATINGS	400
BITUMINOUS ROOF COATINGS	50
BITUMINOUS ROOF PRIMERS	350
BOND BREAKERS	350
CONCRETE CURING COMPOUNDS	350
CONCRETE/MASONRY SEALERS	100
DRIVEWAY SEALERS	50
DRY FOG COATINGS	150
FAUX FINISHING COATINGS	350
FIRE RESISTIVE COATINGS	350
FLOOR COATINGS	100
FORM-RELEASE COMPOUNDS	250
GRAPHIC ARTS COATINGS (SIGN PAINTS)	500
HIGH TEMPERATURE COATINGS	420
INDUSTRIAL MAINTENANCE COATINGS	250
LOW SOLIDS COATINGS[4]	120
MAGNESITE CEMENT COATINGS	450
MASTIC TEXTURE COATINGS	100
METALLIC PIGMENTED COATINGS	500
MULTICOLOR COATINGS	250
PRETREATMENT WASH PRIMERS	420
PRIMERS, SEALERS, & UNDERCOATERS	100
REACTIVE PENETRATING SEALERS	350
RECYCLED COATINGS	250
ROOF COATINGS	50
RUST PREVENTATIVE COATINGS	250
SHELLACS	
CLEAR	730
OPAQUE	550
SPECIALTY PRIMERS, SEALERS & UNDERCOATERS	100
STAINS	250
STONE CONSOLIDANTS	450
SWIMMING POOL COATINGS	340
TRAFFIC MARKING COATINGS	100
TUB & TILE REFINISH COATINGS	420
WATERPROOFING MEMBRANES	250
WOOD COATINGS	275
WOOD PRESERVATIVES	350
ZINC-RICH PRIMERS	340

1. GRAMS OF VOC PER LITER OF COATING, INCLUDING WATER & EXEMPT COMPOUNDS

2. THE SPECIFIED LIMITS REMAIN IN EFFECT UNLESS REVISED LIMITS ARE LISTED IN SUBSEQUENT COLUMNS IN THE TABLE.

3. VALUES IN THIS TABLE ARE DERIVED FROM THOSE SPECIFIED BY THE CALIFORNIA AIR RESOURCES BOARD, ARCHITECTURAL COATINGS SUGGESTED CONTROL MEASURE, FEB. 1, 2008. MORE INFORMATION IS AVAILABLE FROM THE AIR RESOURCES BOARD.

Y N/A RESPON. PARTY

TABLE 4.504.5 - FORMALDEHYDE LIMITS[1]

MAXIMUM FORMALDEHYDE EMISSIONS IN PARTS PER MILLION

PRODUCT	CURRENT LIMIT
HARDWOOD PLYWOOD VENEER CORE	0.05
HARDWOOD PLYWOOD COMPOSITE CORE	0.05
PARTICLE BOARD	0.09
MEDIUM DENSITY FIBERBOARD	0.11
THIN MEDIUM DENSITY FIBERBOARD[2]	0.13

1. VALUES IN THIS TABLE ARE DERIVED FROM THOSE SPECIFIED BY THE CALIF. AIR RESOURCES BOARD, AIR TOXICS CONTROL MEASURE FOR COMPOSITE WOOD AS TESTED IN ACCORDANCE WITH ASTM E 1333. FOR ADDITIONAL INFORMATION, SEE CALIF. CODE OF REGULATIONS, TITLE 17, SECTIONS 93120 THROUGH 93120.12.

2. THIN MEDIUM DENSITY FIBERBOARD HAS A MAXIMUM THICKNESS OF 5/16" (8 MM).

DIVISION 4.5 ENVIRONMENTAL QUALITY (continued)
4.504.3 CARPET SYSTEMS. All carpet installed in the building interior shall meet the requirements of the California Department of Public Health, "Standard Method for the Testing and Evaluation of Volatile Organic Chemical Emissions from Indoor Sources Using Environmental Chambers," Version 1.2, January 2017 (Emission testing method for California Specification 01350)

See California Department of Public Health's website for certification programs and testing labs.

https://www.cdph.ca.gov/Programs/CCDPHP/DEODC/EHLB/IAQ/Pages/VOC.aspx.

4.504.3.1 Carpet cushion. All carpet cushion installed in the building interior shall meet the requirements of the California Department of Public Health, "Standard Method for the Testing and Evaluation of Volatile Organic Chemical Emissions from Indoor Sources Using Environmental Chambers," Version 1.2, January 2017 (Emission testing method for California Specification 01350)

See California Department of Public Health's website for certification programs and testing labs.

https://www.cdph.ca.gov/Programs/CCDPHP/DEODC/EHLB/IAQ/Pages/VOC.aspx.

4.504.3.2 Carpet adhesive. All carpet adhesive shall meet the requirements of Table 4.504.1.

4.504.4 RESILIENT FLOORING SYSTEMS. Where resilient flooring is installed , at least 80% of floor area receiving resilient flooring shall meet the requirements of the California Department of Public Health, "Standard Method for the Testing and Evaluation of Volatile Organic Chemical Emissions from Indoor Sources Using Environmental Chambers," Version 1.2, January 2017 (Emission testing method for California Specification 01350)

See California Department of Public Health's website for certification programs and testing labs.

hhttps://www.cdph.ca.gov/Programs/CCDPHP/DEODC/EHLB/IAQ/Pages/VOC.aspx.

4.504.5 COMPOSITE WOOD PRODUCTS. Hardwood plywood, particleboard and medium density fiberboard composite wood products used on the interior or exterior of the buildings shall meet the requirements for formaldehyde as specified in ARB's Air Toxics Control Measure for Composite Wood (17 CCR 93120 et seq.), by or before the dates specified in those sections, as shown in Table 4.504.5

4.504.5.1 Documentation. Verification of compliance with this section shall be provided as requested by the enforcing agency. Documentation shall include at least one of the following:

1. Product certifications and specifications.
2. Chain of custody certifications.
3. Product labeled and invoiced as meeting the Composite Wood Products regulation (see CCR, Title 17, Section 93120, et seq.).
4. Exterior grade products marked as meeting the PS-1 or PS-2 standards of the Engineered Wood Association, the Australian AS/NZS 2269, European 636 3S standards, and Canadian CSA 0121, CSA 0151, CSA 0153 and CSA 0325 standards.
5. Other methods acceptable to the enforcing agency.

4.505 INTERIOR MOISTURE CONTROL
4.505.1 General. Buildings shall meet or exceed the provisions of the *California Building Standards Code*.

4.505.2 CONCRETE SLAB FOUNDATIONS. Concrete slab foundations required to have a vapor retarder by California Building Code, Chapter 19, or concrete slab-on-ground floors required to have a vapor retarder by the California Residential Code, Chapter 5, shall also comply with this section.

4.505.2.1 Capillary break. A capillary break shall be installed in compliance with at least one of the following:

1. A 4-inch (101.6 mm) thick base of 1/2 inch (12.7mm) or larger clean aggregate shall be provided with a vapor barrier in direct contact with concrete and a concrete mix design, which will address bleeding, shrinkage, and curling, shall be used. For additional information, see American Concrete Institute, ACI 302.2R-06.
2. Other equivalent methods approved by the enforcing agency.
3. A slab design specified by a licensed design professional.

4.505.3 MOISTURE CONTENT OF BUILDING MATERIALS. Building materials with visible signs of water damage shall not be installed. Wall and floor framing shall not be enclosed when the framing members exceed 19 percent moisture content. Moisture content shall be verified in compliance with the following:

1. Moisture content shall be determined with either a probe-type or contact-type moisture meter.Equivalent moisture verification methods may be approved by the enforcing agency and shall satisfy requirements found in Section 101.8 of this code.
2. Moisture readings shall be taken at a point 2 feet (610 mm) to 4 feet (1219 mm) from the grade stamped end of each piece verified.
3. At least three random moisture readings shall be performed on wall and floor framing with documentation acceptable to the enforcing agency provided at the time of approval to enclose the wall and floor framing.

Insulation products which are visibly wet or have a high moisture content shall be replaced or allowed to dry prior to enclosure in wall or floor cavities. Wet-applied insulation products shall follow the manufacturers' drying recommendations prior to enclosure.

4.506 INDOOR AIR QUALITY AND EXHAUST
4.506.1 Bathroom exhaust fans. Each bathroom shall be mechanically ventilated and shall comply with the following:

1. Fans shall be ENERGY STAR compliant and be ducted to terminate outside the building.
2. Unless functioning as a component of a whole house ventilation system, fans must be controlled by a humidity control.
   a. Humidity controls shall be capable of adjustment between a relative humidity range less than or equal to 50% to a maximum of 80%. A humidity control may utilize manual or automatic means of adjustment.
   b. A humidity control may be a separate component to the exhaust fan and is not required to be integral (i.e., built-in)

Notes:

1. For the purposes of this section, a bathroom is a room which contains a bathtub, shower or tub/shower combination.
2. Lighting integral to bathroom exhaust fans shall comply with the *California Energy Code*.

4.507 ENVIRONMENTAL COMFORT
4.507.2 HEATING AND AIR-CONDITIONING SYSTEM DESIGN. Heating and air conditioning systems shall be sized, designed and have their equipment selected using the following methods:

1. The heat loss and heat gain is established according to ANSI/ACCA 2 Manual J - 2011 (Residential Load Calculation), ASHRAE handbooks or other equivalent design software or methods.
2. Duct systems are sized according to ANSI/ACCA 1 Manual D - 2014 (Residential Duct Systems), ASHRAE handbooks or other equivalent design software or methods.
3. Select heating and cooling equipment according to ANSI/ACCA 3 Manual S - 2014 (Residential Equipment Selection), or other equivalent design software or methods.

Exception: Use of alternate design temperatures necessary to ensure the system functions are acceptable.

Y N/A RESPON. PARTY

CHAPTER 7
INSTALLER & SPECIAL INSPECTOR QUALIFICATIONS

702 QUALIFICATIONS
702.1 INSTALLER TRAINING. HVAC system installers shall be trained and certified in the proper installation of HVAC systems including ducts and equipment by a nationally or regionally recognized training or certification program. Uncertified persons may perform HVAC installations when under the direct supervision and responsibility of a person trained and certified to install HVAC systems or contractor licensed to install HVAC systems. Examples of acceptable HVAC training and certification programs include but are not limited to the following:

1. State certified apprenticeship programs.
2. Public utility training programs.
3. Training programs sponsored by trade, labor or statewide energy consulting or verification organizations.
4. Programs sponsored by manufacturing organizations.
5. Other programs acceptable to the enforcing agency.

702.2 SPECIAL INSPECTION [HCD]. When required by the enforcing agency, the owner or the responsible entity acting as the owner's agent shall employ one or more special inspectors to provide inspection or other duties necessary to substantiate compliance with this code. Special inspectors shall demonstrate competence to the satisfaction of the enforcing agency for the particular type of inspection or task to be performed. In addition to other certifications or qualifications acceptable to the enforcing agency, the following certifications or education may be considered by the enforcing agency when evaluating the qualifications of a special inspector:

1. Certification by a national or regional green building program or standard publisher.
2. Certification by a statewide energy consulting or verification organization, such as HERS raters, building performance contractors, and home energy auditors.
3. Successful completion of a third party apprentice training program in the appropriate trade.
4. Other programs acceptable to the enforcing agency.

Notes:
1. Special inspectors shall be independent entities with no financial interest in the materials or the project they are inspecting for compliance with this code.
2. HERS raters are special inspectors certified by the California Energy Commission (CEC) to rate homes in California according to the Home Energy Rating System (HERS).

[BSC] When required by the enforcing agency, the owner or the responsible entity acting as the owner's agent shall employ one or more special inspectors to provide inspection or other duties necessary to substantiate compliance with this code. Special inspectors shall demonstrate competence to the satisfaction of the enforcing agency for the particular type of inspection or task to be performed. In addition, the special inspector shall have a certification from a recognized state, national or international association, as determined by the local agency. The area of certification shall be closely related to the primary job function, as determined by the local agency.

Note: Special inspectors shall be independent entities with no financial interest in the materials or the project they are inspecting for compliance with this code.

703 VERIFICATIONS
703.1 DOCUMENTATION. Documentation used to show compliance with this code shall include but is not limited to, construction documents, plans, specifications, builder or installer certification, inspection reports, or other methods acceptable to the enforcing agency which demonstrate substantial conformance. When specific documentation or special inspection is necessary to verify compliance, that method of compliance will be specified in the appropriate section or identified applicable checklist.

DISCLAIMER: *THIS DOCUMENT IS PROVIDED AND INTENDED TO BE USED AS A MEANS TO INDICATE AREAS OF COMPLIANCE WITH THE CALIFORNIA GREEN BUILDING STANDARDS (CALGREEN) CODE. DUE TO THE VARIABLES BETWEEN BUILDING DEPARTMENT JURISDICTIONS, THIS CHECKLIST IS TO BE USED ON AN INDIVIDUAL PROJECT BASIS AND MAY BE MODIFIED BY THE END USER TO MEET THOSE INDIVIDUAL NEEDS. THE END USER ASSUMES ALL RESPONSIBILITY ASSOCIATED WITH THE USE OF THIS DOCUMENT, INCLUDING VERIFICATION WITH THE FULL CODE.*