AMENDED-1

SUGGESTED AGENDA

TAYLOR COUNTY BOARD OF COUNTY COMMISSIONERS
PERRY, FLORIDA

MONDAY, APRIL 3, 2017
6:00 P.M.

201 E. GREEN STREET
TAYLOR COUNTY ADMINISTRATIVE COMPLEX
OLD POST OFFICE

REGULAR MEETING

NOTICE IS HEREBY GIVEN, PURSUANT TO FLORIDA STATUTES 286.0105, THAT ANY PERSONS DECIDING TO APPEAL ANY MATTER CONSIDERED AT THIS MEETING WILL NEED A RECORD OF THE MEETING AND MAY NEED TO ENSURE THAT A VERBATIM RECORD OF THE PROCEEDINGS IS MADE, WHICH RECORD INCLUDES THE TESTIMONY AND EVIDENCE UPON WHICH THE APPEAL IS TO BE BASED.

ANY PERSON WISHING TO ADDRESS THE BOARD REGARDING AN AGENDAED ITEM WILL BE GIVEN THREE (3) MINUTES FOR COMMENT. A COMMENTER MAY ONLY SPEAK ONE (1) TIME FOR EACH AGENDAED ITEM.

1. Prayer (Guest Pastor)

2. Pledge of Allegiance

3. Approval of Agenda

CONSENT ITEMS:

4. EXAMINATION AND APPROVAL OF INVOICES.

5. THE BOARD TO CONSIDER APPROVAL OF A BUDGET TRANSFER FROM THE GENERAL FUND "RESERVE FOR CAPITAL IMPROVEMENTS" TO COVER NON-BUDGETED EXPENDITURES INCURRED IN RESPONSE TO TROPICAL STORM HERMINE, FOR THE PERIOD 12/6/16 – 3/27/17, AS AGENDAED BY TAMMY TAYLOR, COUNTY FINANCE DIRECTOR.

6. THE BOARD TO CONSIDER ADOPTION OF RESOLUTION TO REFLECT UNANTICIPATED MONIES IN THE SCOP ROAD PROJECT (CARLTON CEMETERY ROAD) FUND, AS AGENDAED BY THE COUNTY FINANCE DIRECTOR.

7. THE BOARD TO CONSIDER APPROVAL OF REQUEST FOR PROPOSALS PACKAGE AND ADVERTISEMENT TO RECONSTRUCT THE HODGES PARK PIER AND PAVILION, AS AGENDAED BY KENNETH DUDLEY, COUNTY ENGINEER.

7-C. THE BOARD TO CONSIDER RATIFYING THE COUNTY ADMINISTRATOR SIGNATURE ON THE MAINTENANCE AND SUPPORT CONTRACT FOR THE SHERIFF OFFICE LIVE SCAN FINGER PRINT MACHINE.

PUBLIC HEARINGS:

8. THE BOARD TO HOLD A PUBLIC HEARING, SET FOR THIS DATE AT 6:00 P.M., OR AS SOON THEREAFTER AS POSSIBLE, TO CONSIDER PETITION TO ABANDON AN ALLEY LOCATED IN BLOCK 84, STEINHATCHEE SUBDIVISION, BETWEEN 2ND. STREET SE AND 3RD. STREET SE, AS AGENDAED BY DANNY GRINER, COUNTY BUILDING DIRECTOR.

PUBLIC REQUESTS:

9. THE BOARD TO DISCUSS TASKING THE COUNTY ATTORNEY WITH AMENDING COUNTY ORDINANCE NO. 88-4, SECTION 2, CHANGING TAYLOR COUNTY DEVELOPMENT AUTHORITY (TCDA) BOARD MEMBERSHIP FROM SEVEN (7) MEMBERS TO NINE (9) MEMBERS, AS REQUESTED BY RANDY NEWMAN, TCDA CHAIRMAN.

COUNTY STAFF ITEMS:

10. THE BOARD TO CONSIDER ADOPTION OF A RESOLUTION REQUESTING THE FLORIDA DEPARTMENT OF TRANSPORTATION (FDOT) TO CONTINUE THE PROCESS OF TRANSFERRING A SECTION OF STATE ROUTE 55, ALSO KNOWN AS U.S. ROUTE 221, FROM THE CITY LIMITS OF PERRY TO THE INTERSECTION OF COUNTY ROAD 359, ALSO KNOWN AS WRIGHT ROAD, AND SUBSEQUENTLY TRANSFERING COUNTY ROAD 359, ALSO KNOWN AS WRIGHT ROAD, TO FDOT, AS AGENDAED BY TED LAKEY, COUNTY ADMINISTRATOR.

11. THE BOARD TO REVIEW AND CONSIDER APPROVING THE 2016-2017 EVALUATION OF THE COMMUNITY TRANSPORTATION COORDINATOR (CTC) – BIG BEND TRANSIT, AS REQUIRED BY THE FLORIDA COMMISSION FOR THE TRANSPORTATION DISADVANTAGED, AS AGENDAED BY MELODY COX, GRANTS DIRECTOR.

12. THE BOARD TO REVIEW AND CONSIDER APPROVING THE FDOT SUPPLEMENTAL JOINT PARTICIPATION AGREEMENT (JPA) #436705-1-94-17 AND ADOPTION OF AUTHORIZING RESOLUTION FOR THE DESIGN AND REPLACEMENT OF AIRFIELD LIGHTING AND SIGNAGE AT PERRY FOLEY AIRPORT, AS AGENDAED BY THE GRANTS DIRECTOR.

COUNTY ATTORNEY:

13. THE BOARD TO CONSIDER APPROVAL OF A PROPOSED ORDINANCE AND NOTICE TO ADVERTISE TO REPEAL COUNTY ORDINANCE NO. 2017-02, AND A PROPOSED ORDINANCE AND NOTICE TO ADVERTISE WHICH SETS OUT AND PASSES THE ONE (1) CENT SALES SURTAX TO BEGIN ONCE THE HOSPITAL BOND IS PAID OFF.

14. THE COUNTY ATTORNEY AND ATTORNEY JASON TAYLOR TO PRESENT SETTLEMENT AGREEMENT IN BRIDIER VS. TAYLOR COUNTY.

15. THE COUNTY ATTORNEY TO DISCUSS CORRESPONDENCE RECEIVED FROM ATTORNEY RAY CURTIS REGARDING TRANSFER OF ONE (1) ACRE FROM THE CITY OF PERRY TO TAYLOR COUNTY FOR LOCATION OF THE FIRE TOWER.

COUNTY ADMINISTRATOR INFORMATIONAL ITEMS:

COMMENTS AND CONCERNS FROM THE PUBLIC FOR NON-AGENDAED ITEMS:

BOARD INFORMATIONAL ITEMS:

Motion to Adjourn

FOR YOUR INFORMATION:

- **THE AGENDA AND ASSOCIATED DOCUMENTATION, IF APPLICABLE, IS AVAILABLE TO THE PUBLIC ON THE FOLLOWING WEBSITE:www.taylorcountygov.com**

- **IF YOU ARE A PERSON WITH A DISABILITY WHO NEEDS ANY ACCOMODATION IN ORDER TO PARTICIPATE IN THIS PROCEEDING, YOU ARE ENTITLED, AT NO COST TO YOU, TO THE PROVISION OF CERTAIN ASSISTANCE. PLEASE CONTACT TED LAKEY, COUNTY ADMINISTRATOR, 201 E. GREEN STREET, PERRY, FLORIDA, 850-838-3500, EXT. 6, WITHIN TWO (2) WORKING DAYS OF THIS PROCEEDING.**

- **ANY PERSON WISHING TO ADDRESS THE BOARD REGARDING AN AGENDAED OR NON-AGENDAED ITEM WILL BE GIVEN THREE (3) MINUTES FOR COMMENT.**

- **BALLOTS USED TO APPOINT CITIZENS TO ADVISORY COMMITTEES AND ADVISORY BOARDS ARE AVAILABLE FOR PUBLIC INSPECTION AFTER THE MEETING AND ARE RETAINED AS PART OF THE PUBLIC RECORD.**

5

TAYLOR COUNTY BOARD OF COMMISSIONERS

County Commission Agenda Item

SUBJECT/TITLE:	
MEETING DATE REQUESTED:	4/3/17

Statement of Issue: 2016/2017 FY
The Board to consider approval of a budget transfer from the general fund "reserve for capital improvements" to cover non-budgeted expenditures incurred in response to Tropical Storm Hermine for the period 12/6/16 – 3/27/17.

Recommended Action: Approval of Budget Transfer

Fiscal Impact: $103,780 (reduction of capital funds)

Budgeted Expense: no

Submitted By: Tammy Taylor, County Finance Director

Contact: 838-3506, ext. 122
ttaylor@taylorclerk.com

SUPPLEMENTAL MATERIAL / ISSUE ANALYSIS

History, Facts & Issues: This will bring cumulative expenditures to date (from the date of Tropical Storm Hermine to 3/27/17) to a total of $1,136,674. In the event of FEMA reimbursement, capital improvement funds would be replenished by the amount reimbursed.

Options:

Attachments: Detail Expenditure Report

SUNGARD PENTAMATION, INC.
DATE: 03/27/2017
TIME: 15:08:12

TAYLOR COUNTY BOARD OF COMMISSIONERS
EXPENDITURE STATUS REPORT

SELECTION CRITERIA: expledgr.key_orgn='0205'
ACCOUNTING PERIOD: 6/17

SORTED BY: FUND,FUNCTION,ACTIVITY,TOTL/DEPT,ACCOUNT
TOTALED ON: FUND,TOTL/DEPT
PAGE BREAKS ON: FUND,TOTL/DEPT

FUND-001 GENERAL FUND
FUNCTION-520 PUBLIC SAFETY
ACTIVITY-525 EMERG. DISASTER RELIEF
TOTL/DEPT-0205 T.S.HERMINE-RESPONSE

(2016/2017 FY)

ACCOUNT	- - - - - TITLE - - - - -	BUDGET	PERIOD EXPENDITURES	ENCUMBRANCES OUTSTANDING	YEAR TO DATE EXP	AVAILABLE BALANCE	YTD/ BUD
51200	REGULAR SALARIES & WAGES	3,682.00	-1,252.60	.00	2,418.60	1,263.40	65.69
51400	OVERTIME	1,478.00	-377.47	.00	1,100.36	377.64	74.45
52110	FICA/MEDICARE TAXES	394.00	-124.70	.00	269.22	124.78	68.33
52200	RETIREMENT CONTRIBUTIONS	165.00	-67.50	.00	97.05	67.95	58.82
53401	CONTRACTUAL SERVICES	356,457.00	.00	81,176.28	358,785.31	-83,504.59	123.43
54610	R&M BUILDINGS & GROUNDS	45.00	13,277.45	2,537.06	19,401.99	-21,894.05	48753.44
54902	LEGAL ADVERTISING	.00	114.19	.00	114.19	-114.19	.00
54907	LICENSE/PERMIT/REGISTRAT	.00	.00	.00	100.00	-100.00	.00
54960	TIPPING FEES-CLASS 1/GAR	21,648.00	.00	.00	21,647.59	.41	100.00
55201	GEN. OPERATING SUPPLIES	15,085.00	.00	.00	15,084.33	.67	100.00
	TOTAL T.S.HERMINE-RESPONSE	398,954.00	11,569.37	83,713.34	419,018.64	-103,777.98	126.01

exceeds Budget

+103,780

Transfer from Reserve for Capital Improvements

— 4/3/17 Agenda —

3/27/17

SUNGARD PENTAMATION, INC.
DATE: 03/27/2017
TIME: 15:26:52

TAYLOR COUNTY BOARD OF COMMISSIONERS
EXPENDITURE TRANSACTION ANALYSIS

SELECTION CRITERIA: transact.key_orgn='0205'
ACCOUNTING PERIOD: 6/17

Cumulative expenditures from 8/31/16 through 3/27/17) $1136,674

FUND - 001 - GENERAL FUND
FD/DEPT - 0205 - T.S.HERMINE-RESPONSE

ACCOUNT	DATE	T/C	ENCUMBRANC	REFERENCE	VENDOR	BUDGET	EXPENDITURES	ENCUMBRANCES	DESCRIPTION
51200	REGULAR SALARIES & WAGES								
11/16	08/31/16	11				.00			
12/16	09/14/16	22					17,212.76		PAYROLL CHARGES
12/16	09/29/16	22					3,489.55		PAYROLL CHARGES
13/16	09/30/16	19		20160687			1,252.60		9/30/16 PAYROLL ACCRUAL
1 /17	10/05/16	11				.00			
1 /17	10/12/16	22					2,317.00		PAYROLL CHARGES
1 /17	10/27/16	22					1,064.40		PAYROLL CHARGES
2 /17	11/09/16	22					289.80		PAYROLL CHARGES
2 /17	11/15/16	25				3,382.00			TS HERMINE 10/1-11/1/16
13/16	12/08/16	25				21,955.00			T.S.HERMINE 2016FYE
3 /17	12/19/16	25				300.00			STORM HERMINE THR 12/6/16
6 /17	03/24/17	19		20170333			-1,252.60		REVERSE 093016 PR ACCRUAL
TOTAL	REGULAR SALARIES & WAGES					25,637.00	24,373.51	.00	
51400	OVERTIME								
11/16	08/31/16	11				.00			
12/16	09/14/16	22					9,704.12		PAYROLL CHARGES
12/16	09/29/16	22					4,955.77		PAYROLL CHARGES
13/16	09/30/16	19		20160687			377.47		9/30/16 PAYROLL ACCRUAL
1 /17	10/05/16	11				.00			
1 /17	10/12/16	22					970.51		PAYROLL CHARGES
1 /17	10/27/16	22					507.32		PAYROLL CHARGES
2 /17	11/15/16	25				1,478.00			TS HERMINE 10/1-11/1/16
13/16	12/08/16	25				15,038.00			T.S.HERMINE 2016FYE
6 /17	03/24/17	19		20170333			-377.47		REVERSE 093016 PR ACCRUAL
TOTAL	OVERTIME					16,516.00	16,137.72	.00	
52110	FICA/MEDICARE TAXES								
11/16	08/31/16	11				.00			
12/16	09/14/16	22					1,631.94		PAYROLL CHARGES-FRINGE
12/16	09/14/16	22					381.61		PAYROLL CHARGES-FRINGE
12/16	09/29/16	22					523.60		PAYROLL CHARGES-FRINGE
12/16	09/29/16	22					122.47		PAYROLL CHARGES-FRINGE
13/16	09/30/16	19		20160687			124.70		9/30/16 PAYROLL ACCRUAL
1 /17	10/05/16	11				.00			
1 /17	10/12/16	22					203.83		PAYROLL CHARGES-FRINGE
1 /17	10/12/16	22					47.68		PAYROLL CHARGES-FRINGE
1 /17	10/27/16	22					97.45		PAYROLL CHARGES-FRINGE
1 /17	10/27/16	22					22.79		PAYROLL CHARGES-FRINGE
2 /17	11/09/16	22					17.97		PAYROLL CHARGES-FRINGE
2 /17	11/09/16	22					4.20		PAYROLL CHARGES-FRINGE
2 /17	11/15/16	25				372.00			TS HERMINE 10/1-11/1/16
13/16	12/08/16	25				2,785.00			T.S.HERMINE 2016FYE
3 /17	12/19/16	25				22.00			STORM HERMINE THR 12/6/16
6 /17	03/24/17	19		20170333			-124.70		REVERSE 093016 PR ACCRUAL
TOTAL	FICA/MEDICARE TAXES					3,179.00	3,053.54	.00	

SELECTION CRITERIA: transact.key_orgn='0205'
ACCOUNTING PERIOD: 6/17

FUND - 001 - GENERAL FUND
FD/DEPT - 0205 - T.S.HERMINE-RESPONSE

ACCOUNT	DATE	T/C	ENCUMBRANC	REFERENCE	VENDOR	BUDGET	EXPENDITURES	ENCUMBRANCES	DESCRIPTION
52110	FICA/MEDICARE TAXES (cont'd)								
52200	RETIREMENT CONTRIBUTIONS								
11/16	08/31/16	11				.00			
12/16	09/14/16	22					2,425.63		PAYROLL CHARGES-FRINGE
12/16	09/29/16	22					303.01		PAYROLL CHARGES-FRINGE
13/16	09/30/16	19		20160687			67.50		9/30/16 PAYROLL ACCRUAL
1 /17	10/05/16	11				.00			
1 /17	10/12/16	22					119.30		PAYROLL CHARGES-FRINGE
1 /17	10/27/16	22					45.25		PAYROLL CHARGES-FRINGE
2 /17	11/15/16	25				165.00			TS HERMINE 10/1-11/1/16
13/16	12/08/16	25				2,797.00			T.S.HERMINE 2016FYE
6 /17	03/24/17	19		20170333			-67.50		REVERSE 093016 PR ACCRUAL
TOTAL	RETIREMENT CONTRIBUTIONS					2,962.00	2,893.19	.00	
52400	WORKERS' COMPENSATION								
11/16	08/31/16	11				.00			
1 /17	10/05/16	11				.00			
TOTAL	WORKERS' COMPENSATION					.00	.00	.00	
53101	PROFESSIONAL SERVICES								
11/16	08/31/16	11				.00			
1 /17	10/05/16	11				.00			
TOTAL	PROFESSIONAL SERVICES					.00	.00	.00	
53401	CONTRACTUAL SERVICES								
11/16	08/31/16	11				.00			
12/16	09/08/16	17	20162070-01		6608 D & L CONTRACTIN			15,735.00	STEINHATCHEE BOAT RAMP
12/16	09/08/16	17	20162070-02		6608 D & L CONTRACTIN			2,861.25	DARK ISLAND BOAT RAMP
12/16	09/08/16	17	20162070-03		6608 D & L CONTRACTIN			15,002.50	KEATON BEACH BOAT RAMP
12/16	09/12/16	21	20162090-01	54391	7133 H.B. TUTEN, JR.		65,550.00	-65,550.00	10%C-M&SUC/BEACHCLEAN
12/16	09/13/16	17	20162090-01		7133 H.B. TUTEN, JR.			65,550.00	FIRST PAYMENT ON CONTRACT
12/16	09/14/16	17	20162097-01		7132 GARY E. ATKINS,			2,000.00	MONITOR CANAL DEBRIS REMO
12/16	09/20/16	17	20162117-01		6608 D & L CONTRACTIN			11,000.00	WATERBORNE & UPLAND PIECE
12/16	09/26/16	17	20162142-01		7133 H.B. TUTEN, JR.			28,626.25	INVOICE DATED 9/10/16 #53
12/16	09/26/16	17	20162142-02		7133 H.B. TUTEN, JR.			204,145.00	INVOICE DATED 9/20/16 #53
1 /17	10/03/16	21		54599	7133 H.B. TUTEN, JR.		80,625.00	.00	FINAL/BEACH-CLEANUP
12/16	10/03/16	21	20162117-01	54528	6608 D & L CONTRACTIN		11,000.00	-11,000.00	WATERBORNE & UPLAND PIECE
12/16	10/03/16	21	20162142-02	54536	7133 H.B. TUTEN, JR.		204,145.00	-204,145.00	INVOICE DATED 9/20/16 #53
12/16	10/03/16	21	20162142-01	54536	7133 H.B. TUTEN, JR.		28,626.25	-28,626.25	INVOICE DATED 9/12/16
12/16	10/03/16	21	20162142-02	533	7133 H.B. TUTEN, JR.		.00	.00	
12/16	10/03/16	21	20162070-01	54528	6608 D & L CONTRACTIN		16,874.22	-15,735.00	STEINHATCHEE BOAT RAMP
12/16	10/03/16	21	20162070-02	54528	6608 D & L CONTRACTIN		2,861.25	-2,861.25	DARK ISLAND BOAT RAMP
12/16	10/03/16	21	20162070-03	54528	6608 D & L CONTRACTIN		15,500.90	-15,002.50	KEATON BEACH BOAT RAMP
1 /17	10/05/16	11				.00			
1 /17	10/17/16	17	20170114-01		7144 CERES ENVIRONMEN			227,420.91	DEBRIS REMOVAL FOR TAYLOR
1 /17	10/18/16	17	20170131-01		5487 PADGETT LAWN CAR			1,200.00	REMOVE TREES AND LIMBS FR

SELECTION CRITERIA: transact.key_orgn='0205'
ACCOUNTING PERIOD: 6/17

FUND - 001 - GENERAL FUND
FD/DEPT - 0205 - T.S.HERMINE-RESPONSE

ACCOUNT	DATE	T/C	ENCUMBRANC	REFERENCE	VENDOR		BUDGET	EXPENDITURES	ENCUMBRANCES	DESCRIPTION
53401	CONTRACTUAL SERVICES			(cont'd)						
13/16	10/18/16	21		54689	7133	H.B. TUTEN, JR.		242,737.50	.00	BEACH CLEANUP/HERMINE
13/16	10/18/16	21	20162097-01	54686	7132	GARY E. ATKINS,		2,000.00	-2,000.00	MONITOR/STORM CLEANUP
13/16	10/28/16	20		54689	7133	H.B. TUTEN, JR.		-242,737.50	.00	BEACH CLEANUP/HERMINE
13/16	10/31/16	21		54717	7133	H.B. TUTEN, JR.		242,737.50	.00	BEACH CLEANUP/HERMINE
13/16	10/31/16	21		54717	7133	H.B. TUTEN, JR.		-65,550.00	.00	LESS10%COST PAID 9/12
2 /17	11/07/16	21	20170114-01	54750	7144	CERES ENVIRONMEN		227,420.91	-227,420.91	STORM/DEBRIS REMOVAL
2 /17	11/07/16	21	20170131-01	54796	5487	PADGETT LAWN CAR		1,200.00	-1,200.00	FCH-REMOVE TREES&LIMB
2 /17	11/15/16	25					309,246.00			TS HERMINE 10/1-11/1/16
2 /17	11/16/16	17	20170317-01		7144	CERES ENVIRONMEN			47,211.05	DEBRIS REMOVAL FROM ROW 9
2 /17	11/22/16	21	20170317-01	54865	7144	CERES ENVIRONMEN		47,211.05	-47,211.05	STORM/DEBRIS REMOVAL
13/16	12/08/16	25					523,746.00			T.S.HERMINE 2016FYE
3 /17	12/13/16	21		T&A EXP-HERM	7152	BARRY BAKER		166.87	.00	REIMB.T&A EXP-HERMINE
3 /17	12/13/16	21		T&A EXP-HERM	7154	LARRY PARKER		556.25	.00	REIMB.T&A EXP-HERMINE
3 /17	12/13/16	21		T&A EXP-HERM	7153	MICHAEL BURFORD		1,341.23	.00	REIMB.T&A EXP-HERMINE
3 /17	12/13/16	21		T&A EXP-HERM	7152	BARRY BAKER		-166.87	.00	REIMB.T&A EXP-HERMINE
3 /17	12/13/16	21		55069	7152	BARRY BAKER		166.87	.00	REIMB.T&A EXP-HERMINE
3 /17	12/13/16	21		T&A EXP-HERM	7153	MICHAEL BURFORD		-1,341.23	.00	REIMB.T&A EXP-HERMINE
3 /17	12/13/16	21		55070	7153	MICHAEL BURFORD		1,341.23	.00	REIMB.T&A EXP-HERMINE
3 /17	12/13/16	21		T&A EXP-HERM	7154	LARRY PARKER		-556.25	.00	REIMB.T&A EXP-HERMINE
3 /17	12/13/16	21		55071	7154	LARRY PARKER		556.25	.00	REIMB.T&A EXP-HERMINE
3 /17	12/13/16	21		T&A EXP-HERM	7152	BARRY BAKER		-166.87	.00	REIMB.T&A EXP-HERMINE
3 /17	12/13/16	21		T&A EXP-HERM	7152	BARRY BAKER		166.87	.00	REIMB.T&A EXP-HERMINE
3 /17	12/13/16	21		T&A EXP-HERM	7153	MICHAEL BURFORD		-1,341.23	.00	REIMB.T&A EXP-HERMINE
3 /17	12/13/16	21		T&A EXP-HERM	7153	MICHAEL BURFORD		1,341.23	.00	REIMB.T&A EXP-HERMINE
3 /17	12/13/16	21		T&A EXP-HERM	7154	LARRY PARKER		-556.25	.00	REIMB.T&A EXP-HERMINE
3 /17	12/13/16	21		T&A EXP-HERM	7154	LARRY PARKER		556.25	.00	REIMB.T&A EXP-HERMINE
3 /17	12/15/16	21		T&A EXP-HERM	7152	BARRY BAKER		-166.87	.00	REIMB.T&A EXP-HERMINE
3 /17	12/15/16	21		T&A EXP-HERM	7152	BARRY BAKER		166.87	.00	REIMB.T&A EXP-HERMINE
3 /17	12/15/16	21		T&A EXP-HERM	7152	BARRY BAKER		-166.87	.00	REIMB.T&A EXP-HERMINE
3 /17	12/15/16	21		T&A EXP-HERM	7152	BARRY BAKER		166.87	.00	REIMB.T&A EXP-HERMINE
3 /17	12/19/16	25					47,211.00			STORM HERMINE THR 12/6/16
5 /17	02/06/17	21		55321	002089	FLA.DEPT.OF AGRI		264.00	.00	HERMINE/SUPPRESS-FIRE
6 /17	03/22/17	17	20171008-01		6608	D & L CONTRACTIN			52,873.80	BIRD RACK REPLACEMENT
6 /17	03/22/17	17	20171008-02		6608	D & L CONTRACTIN			28,302.48	RIVER ENTRANCE MARKER REP
TOTAL	CONTRACTUAL SERVICES						880,203.00	882,530.43	81,176.28	
54100	COMMUNICATIONS									
11/16	08/31/16	11					.00			
1 /17	10/05/16	11					.00			
TOTAL	COMMUNICATIONS						.00	.00	.00	
54300	UTILITY SERVICES									
11/16	08/31/16	11					.00			
1 /17	10/05/16	11					.00			
TOTAL	UTILITY SERVICES						.00	.00	.00	

SELECTION CRITERIA: transact.key_orgn='0205'
ACCOUNTING PERIOD: 6/17

FUND - 001 - GENERAL FUND
FD/DEPT - 0205 - T.S.HERMINE-RESPONSE

ACCOUNT	DATE	T/C	ENCUMBRANC	REFERENCE	VENDOR	BUDGET	EXPENDITURES	ENCUMBRANCES	DESCRIPTION
54402	RENT/LEASE-EQUIPMENT								
54402	RENT/LEASE-EQUIPMENT								
11/16	08/31/16	11				.00			
1 /17	10/05/16	11				.00			
TOTAL	RENT/LEASE-EQUIPMENT					.00	.00	.00	
54610	R&M BUILDINGS & GROUNDS								
11/16	08/31/16	11				.00			
12/16	09/13/16	19		I0913001			2.77		INVENTORY BILLING
12/16	09/14/16	17	20162100-01		6198 DALE YOUNG			1,450.00	REMOVE DOWNED TREES ACROS
12/16	09/26/16	17	20162143-01		6950 STUDSTILL'S OF P			43.92	80 LB QUIKRETE
12/16	10/03/16	21	20162100-01	54585	6198 DALE YOUNG		1,450.00	-1,450.00	REMOVE DOWNED TREES ACROS
1 /17	10/05/16	17	20170035-01		6950 STUDSTILL'S OF P			24.00	PLYWOOD
1 /17	10/05/16	17	20170035-02		6950 STUDSTILL'S OF P			21.00	TUBE OF GLAZING - TO REPA
1 /17	10/05/16	11				.00			
13/16	10/18/16	21	20162143-01	54706	6950 STUDSTILL'S OF P		43.92	-43.92	80 LB QUIKRETE
2 /17	11/15/16	25				45.00			TS HERMINE 10/1-11/1/16
2 /17	11/21/16	21	20170035-01	54920	6950 STUDSTILL'S OF P		23.99	-24.00	PLYWOOD
2 /17	11/21/16	21	20170035-02	54920	6950 STUDSTILL'S OF P		19.47	-21.00	TUBE OF GLAZING - TO REPA
13/16	12/08/16	25				1,497.00			T.S.HERMINE 2016FYE
3 /17	12/20/16	17	20170514-01		001056 PRIDE ENTERPRISE			3,806.04	2X6X10 MORTISE RAIL
3 /17	12/20/16	17	20170514-02		001056 PRIDE ENTERPRISE			3,355.52	4X6X6 MORTISE 2 SLOT LINE
3 /17	12/20/16	17	20170514-03		001056 PRIDE ENTERPRISE			353.92	6X6X6 MORTISE 2 SLOT CORN
3 /17	12/20/16	17	20170514-04		001056 PRIDE ENTERPRISE			804.80	6X6X6 MORTISE 2 SLOT END
3 /17	12/20/16	17	20170514-05		001056 PRIDE ENTERPRISE			63.72	2X8X12' PLANED/NA 16.00 B
3 /17	12/20/16	17	20170514-06		001056 PRIDE ENTERPRISE			201.20	6X6X6 ROUGH/NA 18 BF
3 /17	12/20/16	17	20170514-07		001056 PRIDE ENTERPRISE			1,158.30	8X8X8 ROUGH/NA CROSS-TIE
3 /17	12/20/16	17	20170514-99		001056 PRIDE ENTERPRISE			339.00	ESTIMATED SHIPPING/HANDLI
4 /17	01/10/17	17	20170584-01		7079 KALINICH FENCE C			654.50	SAND FENCING, 50 FT ROLL
4 /17	01/10/17	17	20170584-02		7079 KALINICH FENCE C			315.90	8 FT SAND FENCING POSTS
4 /17	01/10/17	17	20170584-99		7079 KALINICH FENCE C			1,100.00	ESTIMATED SHIPPING/HANDLI
4 /17	01/10/17	17	20170585-01		6501 KIRBY BUILT PROD			2,873.10	#ATR2600 HOUSTON WASTE RE
4 /17	01/10/17	17	20170585-02		6501 KIRBY BUILT PROD			1,190.80	#ATR2605 HOUSTON RECEPTAC
4 /17	01/10/17	17	20170585-03		6501 KIRBY BUILT PROD			1,153.70	#ABC1125 VICTORY BENCHES
4 /17	01/10/17	17	20170585-04		6501 KIRBY BUILT PROD			87.70	#ABC9404 SURFACE MOUNT KI
4 /17	01/10/17	17	20170585-99		6501 KIRBY BUILT PROD			775.78	ESTIMATED SHIPPING/HANDLI
5 /17	02/08/17	17	20170770-01		000116 CASHWAY BLDG.PRO			46.44	3/8" X 5" HDG LAG BOLTS
5 /17	02/08/17	17	20170770-02		000116 CASHWAY BLDG.PRO			229.23	5/8" REBAR
5 /17	02/08/17	17	20170770-03		000116 CASHWAY BLDG.PRO			39.98	AUGER BIT 5/8" X 15"
5 /17	02/08/17	17	20170770-04		000116 CASHWAY BLDG.PRO			17.98	14" METAL CUT-OFF BLADE
5 /17	02/09/17	17	20170775-01		6950 STUDSTILL'S OF P			94.50	8X8X16 CMU BLOCK
5 /17	02/09/17	17	20170775-02		6950 STUDSTILL'S OF P			22.99	4X8X3/4" PLYWOOD
5 /17	02/09/17	17	20170775-03		6950 STUDSTILL'S OF P			59.97	EPOXY ANCHOR ADHESIVE
5 /17	02/09/17	17	20170775-04		6950 STUDSTILL'S OF P			92.43	#4 REBAR (1/2")
5 /17	02/09/17	17	20170775-05		6950 STUDSTILL'S OF P			340.38	80# BAG READY MIX CONCRET
5 /17	02/09/17	17	20170775-06		6950 STUDSTILL'S OF P			17.99	REBAR LOOP TIES
5 /17	02/16/17	17	20170816-01		001407 RAGANS ACE HARDW			12.64	1/8" VINYL COATED CABLE

SELECTION CRITERIA: transact.key_orgn='0205'
ACCOUNTING PERIOD: 6/17

FUND - 001 - GENERAL FUND
FD/DEPT - 0205 - T.S.HERMINE-RESPONSE

ACCOUNT	DATE	T/C	ENCUMBRANC	REFERENCE	VENDOR	BUDGET	EXPENDITURES	ENCUMBRANCES	DESCRIPTION
54610 R&M BUILDINGS & GROUNDS (cont'd)									
5 /17	02/16/17	17		20170816-02	001407 RAGANS ACE HARDW			6.24	1/8" CABLE SLEEVES
5 /17	02/16/17	17		20170816-03	001407 RAGANS ACE HARDW			53.97	32 GAL TRASH CANS
5 /17	02/21/17	21	20170585-01	55437	6501 KIRBY BUILT PROD		2,873.10	-2,873.10	#ATR2600 HOUSTON WASTE RE
5 /17	02/21/17	21	20170585-02	55437	6501 KIRBY BUILT PROD		1,190.80	-1,190.80	#ATR2605 HOUSTON RECEPTAC
5 /17	02/21/17	21	20170585-03	55437	6501 KIRBY BUILT PROD		1,153.70	-1,153.70	#ABC1125 VICTORY BENCHES
5 /17	02/21/17	21	20170585-04	55437	6501 KIRBY BUILT PROD		87.70	-87.70	#ABC9404 SURFACE MOUNT KI
5 /17	02/21/17	21	20170585-99	55437	6501 KIRBY BUILT PROD		775.78	-775.78	ESTIMATED SHIPPING/HANDLI
6 /17	03/06/17	21	20170770-01	55484	000116 CASHWAY BLDG.PRO		46.44	-46.44	3/8" X 5" HDG LAG BOLTS
6 /17	03/06/17	21	20170770-02	55484	000116 CASHWAY BLDG.PRO		229.23	-229.23	5/8" REBAR
6 /17	03/06/17	21	20170770-03	55484	000116 CASHWAY BLDG.PRO		39.98	-39.98	AUGER BIT 5/8" X 15"
6 /17	03/06/17	21	20170770-04	55484	000116 CASHWAY BLDG.PRO		17.98	-17.98	14" METAL CUT-OFF BLADE
6 /17	03/06/17	21	20170584-01	55510	7079 KALINICH FENCE C		654.50	-654.50	SAND FENCING, 50 FT ROLL
6 /17	03/06/17	21	20170584-02	55510	7079 KALINICH FENCE C		315.90	-315.90	8 FT SAND FENCING POSTS
6 /17	03/06/17	21	20170584-99	55510	7079 KALINICH FENCE C		975.00	-1,100.00	ESTIMATED SHIPPING/HANDLI
6 /17	03/07/17	17		20170907-01	000116 CASHWAY BLDG.PRO			65.00	3/8 X 2 3/4 SS ANCHORS
6 /17	03/07/17	17		20170907-02	000116 CASHWAY BLDG.PRO			29.94	PRE-MIX MORTAR
6 /17	03/07/17	17		20170907-03	000116 CASHWAY BLDG.PRO			48.90	PRE-MIX CONCRETE
6 /17	03/07/17	17		20170907-04	000116 CASHWAY BLDG.PRO			8.49	2" STAR EXTERIOR SCREWS
6 /17	03/07/17	17		20170907-05	000116 CASHWAY BLDG.PRO			43.98	3" TORX DEC-SMART SCREWS
6 /17	03/07/17	17		20170907-06	000116 CASHWAY BLDG.PRO			18.50	3/4 UTILITY PLYWOOD
6 /17	03/21/17	17		20170999-01	7099 TREETOP PRODUCTS			2,156.55	SKU# 2ZK2163 CHAMPION HEA
6 /17	03/21/17	17		20170999-02	7099 TREETOP PRODUCTS			326.71	SHIP TO. ATTN. DANNY OQUI
6 /17	03/21/17	21	20170514-02	55620	001056 PRIDE ENTERPRISE		1,303.26	-1,303.26	4X6X6 MORTISE 2 SLOT LINE
6 /17	03/21/17	21	20170514-03	55620	001056 PRIDE ENTERPRISE		353.92	-353.92	6X6X6 MORTISE 2 SLOT CORN
6 /17	03/21/17	21	20170514-04	55620	001056 PRIDE ENTERPRISE		804.80	-804.80	6X6X6 MORTISE 2 SLOT END
6 /17	03/21/17	21	20170514-05	55620	001056 PRIDE ENTERPRISE		63.72	-63.72	2X8X12' PLANED/NA 16.00 B
6 /17	03/21/17	21	20170514-06	55620	001056 PRIDE ENTERPRISE		201.20	-201.20	6X6X6 ROUGH/NA 18 BF
6 /17	03/21/17	21	20170514-07	55620	001056 PRIDE ENTERPRISE		1,158.30	-1,158.30	8X8X8 ROUGH/NA CROSS-TIE
6 /17	03/21/17	21	20170514-99	55620	001056 PRIDE ENTERPRISE		339.00	-339.00	ESTIMATED SHIPPING/HANDLI
6 /17	03/21/17	21	20170514-01	55620	001056 PRIDE ENTERPRISE		3,806.04	-3,806.04	2X6X10 MORTISE RAIL
6 /17	03/21/17	21	20170514-02	55620	001056 PRIDE ENTERPRISE		2,052.26	-2,052.26	4X6X6 MORTISE 2 SLOT LINE
6 /17	03/21/17	21	20170514-03	E0919307	001056 PRIDE ENTERPRISE		.00	.00	
6 /17	03/21/17	21	20170514-04	E0919307	001056 PRIDE ENTERPRISE		.00	.00	
6 /17	03/21/17	21	20170514-05	E0919307	001056 PRIDE ENTERPRISE		.00	.00	
6 /17	03/21/17	21	20170514-06	E0919307	001056 PRIDE ENTERPRISE		.00	.00	
6 /17	03/21/17	21	20170514-07	E0919307	001056 PRIDE ENTERPRISE		.00	.00	
6 /17	03/21/17	21	20170514-99	E0919307	001056 PRIDE ENTERPRISE		.00	.00	
6 /17	03/21/17	21	20170907-01	55581	000116 CASHWAY BLDG.PRO		65.00	-65.00	3/8 X 2 3/4 SS ANCHORS
6 /17	03/21/17	21	20170907-02	55581	000116 CASHWAY BLDG.PRO		29.94	-29.94	PRE-MIX MORTAR
6 /17	03/21/17	21	20170907-03	55581	000116 CASHWAY BLDG.PRO		48.90	-48.90	PRE-MIX CONCRETE
6 /17	03/21/17	21	20170907-04	55581	000116 CASHWAY BLDG.PRO		8.49	-8.49	2" STAR EXTERIOR SCREWS
6 /17	03/21/17	21	20170907-05	55581	000116 CASHWAY BLDG.PRO		43.98	-43.98	3" TORX DEC-SMART SCREWS
6 /17	03/21/17	21	20170907-06	55581	000116 CASHWAY BLDG.PRO		18.50	-18.50	3/4 UTILITY PLYWOOD
6 /17	03/21/17	21	20170816-01	55624	001407 RAGANS ACE HARDW		12.64	-12.64	1/8" VINYL COATED CABLE
6 /17	03/21/17	21	20170816-02	55624	001407 RAGANS ACE HARDW		6.24	-6.24	1/8" CABLE SLEEVES
6 /17	03/21/17	21	20170816-03	55624	001407 RAGANS ACE HARDW		53.97	-53.97	32 GAL TRASH CANS

SELECTION CRITERIA: transact.key_orgn='0205'
ACCOUNTING PERIOD: 6/17

FUND - 001 - GENERAL FUND
FD/DEPT - 0205 - T.S.HERMINE-RESPONSE

ACCOUNT	DATE	T/C	ENCUMBRANC	REFERENCE	VENDOR	BUDGET	EXPENDITURES	ENCUMBRANCES	DESCRIPTION
54610	R&M BUILDINGS & GROUNDS (cont'd)								
6 /17	03/21/17	21	20170775-01	55632	6950 STUDSTILL'S OF P		94.50	-94.50	8X8X16 CMU BLOCK
6 /17	03/21/17	21	20170775-02	55632	6950 STUDSTILL'S OF P		22.99	-22.99	4X8X3/4" PLYWOOD
6 /17	03/21/17	21	20170775-03	55632	6950 STUDSTILL'S OF P		59.97	-59.97	EPOXY ANCHOR ADHESIVE
6 /17	03/21/17	21	20170775-04	55632	6950 STUDSTILL'S OF P		92.43	-92.43	#4 REBAR (1/2")
6 /17	03/21/17	21	20170775-06	55632	6950 STUDSTILL'S OF P		17.99	-17.99	REBAR LOOP TIES
6 /17	03/21/17	21	20170775-01	1702-153150	6950 STUDSTILL'S OF P		.00	.00	
6 /17	03/21/17	21	20170775-02	1702-153150	6950 STUDSTILL'S OF P		.00	.00	
6 /17	03/21/17	21	20170775-03	1702-153150	6950 STUDSTILL'S OF P		.00	.00	
6 /17	03/21/17	21	20170775-04	1702-153150	6950 STUDSTILL'S OF P		.00	.00	
6 /17	03/21/17	21	20170775-05	55632	6950 STUDSTILL'S OF P		340.38	-340.38	80# BAG READY MIX CONCRET
6 /17	03/21/17	21	20170775-06	1702-153150	6950 STUDSTILL'S OF P		.00	.00	
6 /17	03/22/17	18	20170999-01		7099 TREETOP PRODUCTS			27.00	CHANGE ORDER - 1
6 /17	03/22/17	18	20170999-02		7099 TREETOP PRODUCTS			26.80	CHANGE ORDER - 1
TOTAL	R&M BUILDINGS & GROUNDS					1,542.00	20,898.68	2,537.06	
54620	R&M EQUIPMENT								
11/16	08/31/16	11				.00			
11/16	08/31/16	19		I0906001			30.78		INVENTORY BILLING
1 /17	10/05/16	11				.00			
13/16	12/08/16	25				31.00			T.S.HERMINE 2016FYE
TOTAL	R&M EQUIPMENT					31.00	30.78	.00	
54640	R&M AUTOMOBILE								
12/16	09/12/16	11				.00			
12/16	09/12/16	17	20162080-01		7129 RICHARD NORMAN			150.00	TOW CHARGE
12/16	09/12/16	17	20162080-02		7129 RICHARD NORMAN			149.60	MILEAGE
12/16	09/12/16	17	20162080-03		7129 RICHARD NORMAN			200.00	LABOR
12/16	09/12/16	17	20162080-04		7129 RICHARD NORMAN			50.00	EXTRA PERSON
12/16	09/22/16	17	20162135-01		004750 SCOTT GRAMBLING			8.40	R134 FREON
12/16	09/22/16	17	20162135-02		004750 SCOTT GRAMBLING			87.50	IGNITION CIRCUIT DIAGNOST
12/16	09/22/16	17	20162135-03		004750 SCOTT GRAMBLING			8.50	SHOP SUPPLIES
12/16	09/22/16	17	20162135-04		004750 SCOTT GRAMBLING			87.50	A/C DIAGONSTIC
12/16	10/03/16	21	20162080-01	54561	7129 RICHARD NORMAN		150.00	-150.00	TOW CHARGE
12/16	10/03/16	21	20162080-02	54561	7129 RICHARD NORMAN		149.60	-149.60	MILEAGE
12/16	10/03/16	21	20162080-03	54561	7129 RICHARD NORMAN		200.00	-200.00	LABOR
12/16	10/03/16	21	20162080-04	54561	7129 RICHARD NORMAN		50.00	-50.00	EXTRA PERSON
12/16	10/03/16	21	20162135-01	54566	004750 SCOTT GRAMBLING		8.40	-8.40	R134 FREON
12/16	10/03/16	21	20162135-02	54566	004750 SCOTT GRAMBLING		87.50	-87.50	IGNITION CIRCUIT DIAGNOST
12/16	10/03/16	21	20162135-03	54566	004750 SCOTT GRAMBLING		8.50	-8.50	SHOP SUPPLIES
12/16	10/03/16	21	20162135-04	54566	004750 SCOTT GRAMBLING		87.50	-87.50	A/C DIAGONSTIC
13/16	12/08/16	25							T.S.HERMINE 2016FYE
TOTAL	R&M AUTOMOBILE					742.00	741.50	.00	
54901	OTHER CURRENT CHGS (MISC)								
11/16	08/31/16	11				.00			
1 /17	10/05/16	11				.00			

SELECTION CRITERIA: transact.key_orgn='0205'
ACCOUNTING PERIOD: 6/17

FUND - 001 - GENERAL FUND
FD/DEPT - 0205 - T.S.HERMINE-RESPONSE

ACCOUNT	DATE	T/C	ENCUMBRANC	REFERENCE	VENDOR	BUDGET	EXPENDITURES	ENCUMBRANCES	DESCRIPTION
54901	OTHER CURRENT CHGS (MISC) (cont'd)								
13/16	10/18/16	21	54672		6809 BANK OF AMERICA,		16.47	.00	FOOD/ADM&LAWENF-STORM
13/16	12/08/16	25				17.00			T.S.HERMINE 2016FYE
TOTAL	OTHER CURRENT CHGS (MISC)					17.00	16.47	.00	
54902	LEGAL ADVERTISING								
6 /17	03/07/17	11				.00			
6 /17	03/21/17	21	55618		000124 PERRY NEWSPAPERS		114.19	.00	BID/NAV.AIDS-BIRDRACK
TOTAL	LEGAL ADVERTISING					.00	114.19	.00	
54907	LICENSE/PERMIT/REGISTRAT								
5 /17	02/06/17	11				.00			
5 /17	02/07/17	17		20170741-01	002764 FL DEPT OF ENVIR			100.00	DREDGING PERMIT APPLICATI
5 /17	02/21/17	21	55421	20170741-01	002764 FL DEPT OF ENVIR		100.00	-100.00	USACE/DREDGING PERMIT
TOTAL	LICENSE/PERMIT/REGISTRAT					.00	100.00	.00	
54960	TIPPING FEES-CLASS 1/GARB								
13/16	09/30/16	11				.00			
13/16	10/18/16	21	54670		002420 AUCILLA AREA SOL		49,666.57	.00	STORM HERMINE/CERES
2 /17	11/17/16	11				.00			
2 /17	11/22/16	21	54857		002420 AUCILLA AREA SOL		21,647.59	.00	STORM HERMINE/CERES
13/16	12/08/16	25				49,667.00			T.S.HERMINE 2016FYE
3 /17	12/19/16	25				21,648.00			STORM HERMINE THR 12/6/16
TOTAL	TIPPING FEES-CLASS 1/GARB					71,315.00	71,314.16	.00	
55103	EQUIPMENT < $1,000								
11/16	08/31/16	11				.00			
1 /17	10/05/16	11				.00			
TOTAL	EQUIPMENT < $1,000					.00	.00	.00	
55201	GEN. OPERATING SUPPLIES								
11/16	08/31/16	11				.00			
11/16	08/31/16	19		I0906001			618.87		INVENTORY BILLING
11/16	09/01/16	17		20162053-01	000874 WILSON'S BAIT &			153.65	BLACK BOOTS - STORM HERMI
12/16	09/13/16	19		I0913001			2,054.20		INVENTORY BILLING
12/16	09/20/16	21	54499	20162053-01	000874 WILSON'S BAIT &		153.65	-153.65	BLACK BOOTS - STORM HERMI
12/16	09/21/16	17		20162121-01	5886 A MINING GROUP,			285.18	LIMEROCK HUALED TO JODY M
12/16	09/21/16	17		20162123-01	5886 A MINING GROUP,			484.31	LIMEROCK HAULED TO 5TH AV
12/16	09/21/16	17		20162123-02	5886 A MINING GROUP,			123.00	LIMEROCK HAULED 9/8/16
12/16	09/21/16	17		20162124-01	5886 A MINING GROUP,			996.38	LIMEROCK HAULED TO SALT G
12/16	09/21/16	17		20162124-02	5886 A MINING GROUP,			285.94	#5 ROCK HAULED TO RIVER A
12/16	09/21/16	17		20162125-01	5886 A MINING GROUP,			844.38	LIMEROCK HAULED TO YATES
12/16	09/21/16	17		20162125-02	5886 A MINING GROUP,			119.69	LIMEROCK HAULED 9/13/16
12/16	09/28/16	17		20162149-01	000407 CRIBBS & SONS, I			117.64	(2) STRAPS 3 X 30'
12/16	10/03/16	21	54527	20162149-01	000407 CRIBBS & SONS, I		117.64	-117.64	(2) STRAPS 3 X 30'
12/16	10/03/16	21	54511	20162121-01	5886 A MINING GROUP,		285.18	-285.18	LIMEROCK HUALED TO JODY M
12/16	10/03/16	21	54511	20162123-01	5886 A MINING GROUP,		484.31	-484.31	LIMEROCK HAULED TO 5TH AV

SELECTION CRITERIA: transact.key_orgn='0205'
ACCOUNTING PERIOD: 6/17

FUND - 001 - GENERAL FUND
FD/DEPT - 0205 - T.S.HERMINE-RESPONSE

ACCOUNT	DATE	T/C	ENCUMBRANC	REFERENCE	VENDOR	BUDGET	EXPENDITURES	ENCUMBRANCES	DESCRIPTION
55201 GEN. OPERATING SUPPLIES (cont'd)									
12/16	10/03/16	21	20162123-02	54511	5886 A MINING GROUP,		123.00	-123.00	LIMEROCK HAULED 9/8/16
12/16	10/03/16	21	20162125-01	54511	5886 A MINING GROUP,		844.38	-844.38	LIMEROCK HAULED TO YATES
12/16	10/03/16	21	20162125-02	54511	5886 A MINING GROUP,		119.69	-119.69	LIMEROCK HAULED 9/13/16
12/16	10/03/16	21	20162124-01	54511	5886 A MINING GROUP,		996.38	-996.38	LIMEROCK HAULED TO SALT G
12/16	10/03/16	21	20162124-02	54511	5886 A MINING GROUP,		285.95	-285.94	#5 ROCK HAULED TO RIVER A
1 /17	10/05/16	11				.00			
1 /17	10/06/16	17	20170043-01		5886 A MINING GROUP,			2,137.63	LIMEROCK HAULED FOR STORM
1 /17	10/06/16	17	20170044-01		5886 A MINING GROUP,			1,113.31	LIMEROCK HAULED FOR STORM
1 /17	10/06/16	17	20170045-01		5886 A MINING GROUP,			1,114.00	LIMEROCK HAULED FOR STORM
1 /17	10/06/16	17	20170046-01		5886 A MINING GROUP,			477.19	LIMEROCK HAULED FOR STORM
1 /17	10/06/16	17	20170046-02		5886 A MINING GROUP,			578.66	LIMEROCK HAULED FOR STORM
1 /17	10/06/16	17	20170052-01		5886 A MINING GROUP,			903.94	LIMEROCK HAULED FOR STORM
1 /17	10/06/16	17	20170053-01		5886 A MINING GROUP,			738.06	LIMEROCK HAULED FOR STORM
1 /17	10/06/16	17	20170054-01		5886 A MINING GROUP,			1,084.31	LIMEROCK HAULED FOR STORM
1 /17	10/06/16	17	20170055-01		5886 A MINING GROUP,			1,120.06	LIMEROCK HAULED FOR STORM
1 /17	10/06/16	17	20170056-01		5886 A MINING GROUP,			1,113.50	LIMEROCK HAULED FOR STORM
1 /17	10/13/16	21	20170043-01		5886 A MINING GROUP,		.00	-2,137.63	LIMEROCK HAULED FOR STORM
1 /17	10/13/16	21	20170044-01		5886 A MINING GROUP,		.00	-1,113.31	LIMEROCK HAULED FOR STORM
1 /17	10/13/16	21	20170045-01		5886 A MINING GROUP,		.00	-1,114.00	LIMEROCK HAULED FOR STORM
1 /17	10/13/16	21	20170046-01		5886 A MINING GROUP,		.00	-477.19	LIMEROCK HAULED FOR STORM
1 /17	10/13/16	21	20170046-02		5886 A MINING GROUP,		.00	-578.66	LIMEROCK HAULED FOR STORM
1 /17	10/13/16	21	20170052-01		5886 A MINING GROUP,		.00	-903.94	LIMEROCK HAULED FOR STORM
1 /17	10/13/16	21	20170053-01		5886 A MINING GROUP,		.00	-738.06	LIMEROCK HAULED FOR STORM
1 /17	10/13/16	21	20170054-01		5886 A MINING GROUP,		.00	-1,084.31	LIMEROCK HAULED FOR STORM
1 /17	10/13/16	21	20170055-01		5886 A MINING GROUP,		.00	-1,120.06	LIMEROCK HAULED FOR STORM
13/16	10/18/16	21		54665	5886 A MINING GROUP,		2,137.63	.00	LIMEROCK HAULED 9/14
13/16	10/18/16	21		54665	5886 A MINING GROUP,		1,113.33	.00	LIMEROCK HAULED 9/15
13/16	10/18/16	21		54665	5886 A MINING GROUP,		1,114.01	.00	LIMEROCK HAULED 9/19
13/16	10/18/16	21		54665	5886 A MINING GROUP,		477.20	.00	LIMEROCK HAULED 9/20
13/16	10/18/16	21		54665	5886 A MINING GROUP,		578.66	.00	LIMEROCK SURGE ROCK
13/16	10/18/16	21		54665	5886 A MINING GROUP,		903.95	.00	LIMEROCK HAULED 9/21
13/16	10/18/16	21		54665	5886 A MINING GROUP,		738.07	.00	LIMEROCK HAULED 9/22
13/16	10/18/16	21		54665	5886 A MINING GROUP,		1,084.32	.00	LIMEROCK HAULED 9/26
13/16	10/18/16	21		54672	5886 A MINING GROUP,		1,120.08	.00	LIMEROCK HAULED 9/27
13/16	10/18/16	21		54672	6809 BANK OF AMERICA,		179.76	.00	BATTERIES/RDBARRICADE
2 /17	11/02/16	17	20170219-01		6809 BANK OF AMERICA,		21.36	.00	ANTENNA/TV@REDCROSSSH
2 /17	11/03/16	17	20170230-01		6198 DALE YOUNG			3,000.00	REMOVE (3) DOCKS FROM ECO
2 /17	11/03/16	17	20170231-01		5886 A MINING GROUP,			1,088.69	LIMEROCK HAULED FOR STORM
2 /17	11/03/16	17	20170231-02		5886 A MINING GROUP,			370.94	LIMEROCK HAULED FOR STORM
2 /17	11/03/16	17	20170236-01		5886 A MINING GROUP,			489.81	LIMEROCK HAULED FOR STORM
2 /17	11/03/16	17	20170236-02		5886 A MINING GROUP,			612.88	LIMEROCK HAULED FOR STORM
2 /17	11/03/16	17	20170236-03		5886 A MINING GROUP,			119.31	LIMEROCK HAULED OR STORM
2 /17	11/03/16	17	20170237-01		5886 A MINING GROUP,			120.31	LIMEROCK HAULED FOR STORM
2 /17	11/03/16	17	20170237-02		5886 A MINING GROUP,			1,080.81	LIMEROCK HAULED FOR STORM
2 /17	11/03/16	17	20170238-01		5886 A MINING GROUP,			117.19	LIMEROCK HAULED FOR STORM
								242.69	LIMEROCK HAULED FOR STORM

SELECTION CRITERIA: transact.key_orgn='0205'
ACCOUNTING PERIOD: 6/17

FUND - 001 - GENERAL FUND
FD/DEPT - 0205 - T.S.HERMINE-RESPONSE

ACCOUNT	DATE	T/C	ENCUMBRANC	REFERENCE	VENDOR	BUDGET	EXPENDITURES	ENCUMBRANCES	DESCRIPTION
55201	GEN. OPERATING SUPPLIES (cont'd)								
2 /17	11/03/16	17	20170238-02		5886 A MINING GROUP,			1,193.81	LIMEROCK HAULED FOR STORM
2 /17	11/03/16	17	20170242-01		5886 A MINING GROUP,			252.13	LIMEROCK HAULED FOR STORM
2 /17	11/03/16	17	20170242-02		5886 A MINING GROUP,			989.31	LIMEROCK HAULED FOR STORM
2 /17	11/07/16	21	20170056-01	54735	5886 A MINING GROUP,		1,113.52	-1,113.50	LIMEROCK HAULED FOR STORM
2 /17	11/07/16	17	20170245-01		5886 A MINING GROUP,			812.63	LIMEROCK HAULED FOR STORM
2 /17	11/07/16	17	20170246-01		5886 A MINING GROUP,			367.81	LIMEROCK HAULED FOR STORM
2 /17	11/07/16	17	20170249-01		5886 A MINING GROUP,			486.81	LIMEROCK HAULED FOR STORM
2 /17	11/07/16	17	20170250-01		5886 A MINING GROUP,			362.94	LIMEROCK HAULED FOR STORM
2 /17	11/07/16	17	20170250-02		5886 A MINING GROUP,			1,434.44	LIMEROCK HAULED TO JOB
2 /17	11/07/16	17	20170251-01		5886 A MINING GROUP,			828.19	LIMEROCK HAULED FOR STORM
2 /17	11/15/16	25				1,114.00			TS HERMINE 10/1-11/1/16
2 /17	11/21/16	21	20170236-03	54850	5886 A MINING GROUP,		120.31	-120.31	LIMEROCK HAULED FOR STORM
2 /17	11/21/16	21	20170230-01	54850	5886 A MINING GROUP,		1,088.69	-1,088.69	LIMEROCK HAULED FOR STORM
2 /17	11/21/16	21	20170231-01	54850	5886 A MINING GROUP,		370.95	-370.94	LIMEROCK HAULED FOR STORM
2 /17	11/21/16	21	20170231-02	54850	5886 A MINING GROUP,		489.81	-489.81	LIMEROCK HAULED FOR STORM
2 /17	11/21/16	21	20170242-01	54850	5886 A MINING GROUP,		252.13	-252.13	LIMEROCK HAULED FOR STORM
2 /17	11/21/16	21	20170242-02	54850	5886 A MINING GROUP,		989.31	-989.31	LIMEROCK HAULED FOR STORM
2 /17	11/21/16	21	20170238-01	54850	5886 A MINING GROUP,		242.69	-242.69	LIMEROCK HAULED FOR STORM
2 /17	11/21/16	21	20170238-02	54850	5886 A MINING GROUP,		1,193.81	-1,193.81	LIMEROCK HAULED FOR STORM
2 /17	11/21/16	21	20170237-01	54850	5886 A MINING GROUP,		1,080.83	-1,080.81	LIMEROCK HAULED FOR STORM
2 /17	11/21/16	21	20170237-02	54850	5886 A MINING GROUP,		117.19	-117.19	LIMEROCK HAULED FOR STORM
2 /17	11/21/16	21	20170236-01	54850	5886 A MINING GROUP,		612.88	-612.88	LIMEROCK HAULED FOR STORM
2 /17	11/21/16	21	20170236-02	54850	5886 A MINING GROUP,		119.31	-119.31	LIMEROCK HAULED OR STORM
2 /17	11/22/16	21	20170245-01	54850	5886 A MINING GROUP,		812.64	-812.63	LIMEROCK HAULED FOR STORM
2 /17	11/22/16	21	20170246-01	54850	5886 A MINING GROUP,		367.82	-367.81	LIMEROCK HAULED FOR STORM
2 /17	11/22/16	21	20170251-01	54850	5886 A MINING GROUP,		828.21	-828.19	LIMEROCK HAULED FOR STORM
2 /17	11/22/16	21	20170250-01	54850	5886 A MINING GROUP,		362.95	-362.94	LIMEROCK HAULED FOR STORM
2 /17	11/22/16	21	20170250-02	54850	5886 A MINING GROUP,		1,434.44	-1,434.44	LIMEROCK HAULED TO JOB
2 /17	11/22/16	21	20170249-01	709991	5886 A MINING GROUP,		486.84	-486.81	LIMEROCK HAULED FOR STORM
2 /17	11/22/16	21	20170249-01	709991	5886 A MINING GROUP,		-486.84	486.81	LIMEROCK HAULED FOR STORM
2 /17	11/22/16	21	20170249-01	54850	5886 A MINING GROUP,		486.84	-486.81	LIMEROCK HAULED FOR STORM
2 /17	11/22/16	21	20170219-01	54931	6198 DALE YOUNG		3,000.00	-3,000.00	REMOVE (3) DOCKS FROM ECO
13/16	12/08/16	25				15,552.00			T.S.HERMINE 2016FYE
3 /17	12/19/16	25				13,971.00			STORM HERMINE THR 12/6/16
TOTAL	GEN. OPERATING SUPPLIES					30,637.00	30,635.95	.00	
55202	SAFETY PRODUCTS/SUPPLIES								
11/16	08/31/16	11				.00			
11/16	09/01/16	17	20162052-01		001407 RAGANS ACE HARDW			119.94	BOOT BUFFALO 16"BLK SZ 7.
12/16	09/20/16	21	20162052-01	54478	001407 RAGANS ACE HARDW		119.94	-119.94	BOOT BUFFALO 16"BLK SZ 7.
1 /17	10/05/16	11				.00			
13/16	12/08/16	25				120.00			T.S.HERMINE 2016FYE
TOTAL	SAFETY PRODUCTS/SUPPLIES					120.00	119.94	.00	
55210	PETROLEUM PRODUCTS								
11/16	08/31/16	11				.00			

SELECTION CRITERIA: transact.key_orgn='0205'
ACCOUNTING PERIOD: 6/17

FUND - 001 - GENERAL FUND
FD/DEPT - 0205 - T.S.HERMINE-RESPONSE

ACCOUNT	DATE	T/C	ENCUMBRANC	REFERENCE	VENDOR	BUDGET	EXPENDITURES	ENCUMBRANCES	DESCRIPTION
55210	PETROLEUM PRODUCTS			(cont'd)					
1 /17	10/05/16	11				.00			
TOTAL	PETROLEUM PRODUCTS					.00	.00	.00	
55220	TOOLS & IMPLEMENTS								
11/16	08/31/16	11				.00			
1 /17	10/05/16	11				.00			
TOTAL	TOOLS & IMPLEMENTS					.00	.00	.00	
TOTAL	T.S.HERMINE-RESPONSE					1,032,901.00	1,052,960.06	83,713.34	
TOTAL	GENERAL FUND					1,032,901.00	1,052,960.06	83,713.34	
TOTAL REPORT						1,032,901.00	1,052,960.06	83,713.34	

+ 1136673.40
Total Cumulative Expenditures

1,052,960.06 +
83,713.34 +
002
1,136,673.40 =

0.C

1,032,901.00 +
1,136,673.40 -
000
103,772.40 =

0.C

6

R E S O L U T I O N

IN COMPLIANCE to the laws of the State of Florida, as per Florida Statute 129.06(b), the undersigned Clerk and Auditor for the Board of County Commissioners of Taylor County, Florida, made and prepared the following budget changes to reflect unanticipated monies for a particular purpose which caused the **SCOP ROAD PROJECT (Carlton Cemetery Road) FUND** for the fiscal period ending September 30, 2017, to be in excess of the advertised budget.

BE IT RESOLVED that the listed receipts and appropriations be added to, included in and transferred to the **SCOP ROAD PROJECT FUND** budget for the fiscal year ending September 30, 2017.

Amount	Account	Account Name
$750,000	174-3344905	SCOP Grant - Revenue
		SCOP Project/Carlton Cemetery Road
$750,000	0337-53401	Contractual Services

NOW THEREFORE BE IT RESOLVED by the Board of County Commissioners of Taylor County, Florida, that they do approve as provided by law this resolution this 3rd day of April, 2017 at Perry, Taylor County, Florida, to amend the budget for the fiscal period ending September 30, 2017 with a motion by Commissioner_____, seconded by Commissioner _____, and carried unanimously.

SIGN HERE

_____ _____

Annie Mae Murphy, Clerk-Auditor Chairman

(Supplemental Grant Funding awarded 2017FY)

Florida Department of Transportation

RICK SCOTT
GOVERNOR

1109 South Marion Avenue
Lake City, Florida 32025-5874

RACHEL D. CONE
INTERIM SECRETARY

March 21, 2017

The Honorable Pam Feagle, Chair
Taylor County Board of County Commissioners
201 E. Green Street
PO Box 620
Perry, Florida 32348

Subject: **Small County Outreach Program (SA # 1)**
Widening and Resurfacing of Carlton Cemetery Road
From Puckett Road to US 19/98
Financial Project ID: 434557-1-54-01
Contract # G0667

Dear Chair Feagle:

Enclosed for your files is a fully executed copy of the Small County Outreach Program Agreement – SA # 1 for the subject project.

Funds in the amount of $725,000.00 have been added to cover the low bid.

Your assistance in securing execution is appreciated. Should you have questions or need additional information, I can be reached at 1-800-749-2967, Extension 7402.

Sincerely,

Kim Evans
District Local Programs Administrator

/ke
Enclosures

Cc: Mr. Kenneth Dudley, P.E., County Engineer

The Honorable Pam Feagle, Chair Taylor County Board of County Commissioners 201 E. Green Street Post Office Box 620 Perry, Florida 32348	STATE OF FLORIDA DEPARTMENT OF TRANSPORTATION SMALL COUNTY OUTREACH PROGRAM (SCOP) SUPPLEMENTAL AGREEMENT# 1	Financial Project ID: 434557-1-54-01 Contract Number: G0667

PROJECT DESCRIPTION

Per Florida Statutes 339.2818, The City of Chiefland desires to supplement the Small County Outreach Program Agreement (SCOP) as identified above. All provisions in the basic Agreement remain in effect except as expressly modified by this Supplement. The changes to the Agreement is described below:

Name: Carlton Cemetery Road Length

Termini: from Puckett Road to US 19/98

Description of Work: widening and resurfacing

Reason for Supplement: **add construction funds to cover low bid in the amount of $725,000.**

TYPE OF WORK By Fiscal Year	(3) TOTAL PROJECT ESTIMATE FUNDS (100%)	(2) AGENCY FUNDS (0%)	(1) STATE & FEDERAL FUNDS (100%)
Design			
2007-2008			
2008-2009			
2009-2010			
Total Design Cost			
Right of Way			
2008-2009			
2009-2010			
2010-2011			
Total Right of Way Cost			
Construction			
2015-2016	$ 1,140,000.00		$ 1,140,000.00
2016-2017	$ 725,000.00		$ 725,000.00
2017-2018			
2018-2019			
Total Contract Costs	$ 1,865,000.00		$ 1,865,000.00
Construction Engineering and Inspection			
2012-2013			
2013-2014			
2014-2015			
2015-2016			
Total Construction Engineering			
Total Cost of Project	**$ 1,865,000.00**		**$ 1,865,000.00**

The Department's fiscal year begins on July 1. For this project, funds are not projected to be available until after July 1st each fiscal year. The Department will notify the Agency, in writing, when funds are available. The Small County Outreach Program project (SCOP) statutory percentage is 75/25% as outlined in Section 339.2818, Florida Statutes. The SCOP allows for the County's 25% participation to be accomplished through payment of funds or in-kind services. However, Taylor County is eligible for and has requested a Rural Economic Development Initiative (REDI) waiver for purposes of waiving the required25% participation requirement outlined in Florida Statutes 339.2818. The Department has granted the REDI waiver.

The Honorable Pam Feagle, Chair Taylor County Board of County Commissioners 201 E. Green Street Post Office Box 620 Perry, Florida 32348	STATE OF FLORIDA DEPARTMENT OF TRANSPORTATION **SMALL COUNTY OUTREACH PROGRAM (SCOP)** SUPPLEMENTAL AGREEMENT# 1	Financial Project ID: **434557-1-54-01** Contract Number: **G0667**

IN WITNESS WHEREOF, the parties have caused these presents to be executed the day and year first above written.

TAYLOR COUNTY

By: _____
Name:
Title:

Attest: _____
Name: Annie Mae Murphy
Title: Clerk to Board

Date: 2/21/17

As to form:

_____
Attorney

STATE OF FLORIDA DEPARTMENT OF TRANSPORTATION

By: _____
Name: Greg Evans
Title: District Two Secretary

Attest: _____
Name: Lisa Lambert
Title: Executive Secretary

Date: March 14, 2017

As to form:

_____ 3.10.17
District Attorney

See attached Encumbrance Form for date of funding approval by Comptroller.

*RESOLUTION NO.*_____

WHEREAS, the Board of County Commissioners have been informed that a Resolution should be passed authorizing the Chair of the Board of County Commissioners to enter into the Florida Department of Transportation's Small County Outreach Program (SCOP) Supplemental Reimbursement Agreement to widen and resurface Carlton Cemetery Road from Puckett Road to US Hwy 19/98 for approximately 1.9 miles, and

WHEREAS, Supplemental Agreement No. 1 will have no other effect on the Carlton Cemetery Road project or the prior agreement other than providing an additional $725,000.00 of funding, and

WHEREAS, the Board has determined that it is in the best interest of Taylor County to execute Supplemental Agreement No. 1.

THEREFORE, BE IT RESOLVED by the Board of County Commissioners of Taylor County, Florida, that:

1. The Chair of the Board is authorized to enter into the SCOP Supplemental Reimbursement Agreement to widen and resurface Carlton Cemetery Road from Puckett Road to US Hwy 19/98 for approximately 1.9 miles in Taylor County, Florida.

PASSED in regular session this 21st day of February, 2017.

BOARD OF COUNTY COMMISSIONERS
TAYLOR COUNTY, FLORIDA.

BY: _____
Pam Feagle, Chair

BOARD OF COUNTY COMMISSIONERS TAYLOR COUNTY SEAL FLORIDA

ATTEST:

Annie Mae Murphy

ANNIE MAE MURPHY, Clerk

To: kimberly.evans@dot.state.fl.us

FLORIDA DEPARTMENT OF TRANSPORTATION
FUNDS APPROVAL

G0667

3/8/2017

CONTRACT INFORMATION

Contract:	G0667
Contract Type:	GD - GRANT DISBURSEMENT (GRANT)
Method of Procurement:	G - GOVERMENTAL AGENCY (287.057,F.S.)
Vendor Name:	TAYLOR COUNTY BOCC
Vendor ID:	F596000879041
Beginning Date of This Agreement:	11/20/2015
Ending Date of This Agreement:	06/30/2018
Contract Total/Budgetary Ceiling:	ct = $1,865,000.00
Description:	widen & resurface Carlton Cemetery Road

FUNDS APPROVAL INFORMATION

FUNDS APPROVED/REVIEWED FOR ROBIN M. NAITOVE, CPA, COMPTROLLER ON 3/8/2017

Action:	Supplemental
Organization Code:	55024010206
Expansion Option:	AJ
Object Code:	751000
Amount:	$725,000.00
Financial Project:	43455715401
Work Activity (FCT):	215
CFDA:	
Fiscal Year:	2017
Budget Entity:	55150200
Category/Category Year:	085576/17
Amendment ID:	S001
Sequence:	00
User Assigned ID:	1
Enc Line (6s)/Status:	0002/04

Total Amount: $725,000.00

TAYLOR COUNTY BOARD OF COMMISSIONERS	
County Commission Agenda Item	
SUBJECT/TITLE:	BOARD TO CONSIDER APPROVAL OF REQUEST FOR PROPOSALS PACKAGE AND ADVERTISEMENT TO RECONSTRUCT THE HODGES PARK PIER AND PAVILION.
MEETING DATE REQUESTED:	April 3, 2017

Statement of Issue:

In the wake of Hurricane Hermine, the pier and pavilion at Hodges Park suffered extensive damage. In an effort to restore this structure, The Board is being asked to approve advertising to reconstruct the pier and pavilion.

Recommended Action:

The Board of County Commissioners should approve the proposed Request for Proposals Package to reconstruct the Hodges Park pier and pavilion.

Fiscal Impact: FISCAL YR 2016/17 - 75% FEMA Reimbursement
12.5% State of Florida FEMA Reimbursement; 12.5% Local Funds

Budgeted Expense: NO (FY 16/17)

Submitted By: COUNTY ENGINEER

Contact: COUNTY ENGINEER

SUPPLEMENTAL MATERIAL / ISSUE ANALYSIS

History, Facts & Issues:

On September 2, 2016, Hurricane Hermine made landfall with the Taylor County Coast bringing with it 80 mph winds and destructive wave forces. Several coastal structures were damaged or destroyed in its path including the Hodges Park Pier and Pavilion The reconstruction of this structure is being sought through this Request for Proposals.

Along with the many other issues, the replacement of this structure was addressed through FEMA for reimbursement. Once received, Staff with further coordinate with FEMA for completion of that reimbursement valuation. The project will be reimbursed by FEMA in accordance with the Hurricane Hermine Event in a 75/12.5/12.5 split between FEMA.State/County respectively. As an unbudgeted expense, the overall expense and more specifically the local portion of funding will need to be addressed further once proposals are received.

Options:

1) Approve the proposed Request for Proposals advertisement.

2) Reject the proposed Request for Proposals advertisement and state reasons for such denial.

Attachments:

Request for Proposals Package

BID DOCUMENTS

Hodge's Park
Pier Reconstruction
Taylor County, Florida
2017-001-ENG

March 2017

Prepared for:

Taylor County Board of County Commissioners
108 N. Jefferson St.
Perry, Florida 32347

Prepared by:

Taylor County Engineering
201 East Green Street
Perry, FL 32347
850.838.3500

TABLE OF CONTENTS

PART 1 - BIDDING REQUIREMENTS

Invitation to Bid
Instructions to Bidders
Bid Forms
Hold Harmless, Release and Indemnity Agreement
Public Entity Crimes Statement
Non-Collusion Affidavit

PART 2 - CONTRACT FORMS

Agreement Between Owner and Contractor
Bid Bond
Performance and Payment Bond

PART 3 – CONDITIONS OF THE CONTRACT

Standard General Conditions
Supplementary Conditions

PART 4 –SPECIFICATIONS

DIVISION 1 – GENERAL REQUIREMENTS

01100 Summary of Work
01600 Material and Equipment
01720 Project Record Documents

DIVISION 2 – SITE WORK

02010 Stormwater Pollution Prevention Plan
02050 Demolition

DIVISION 3 THRU 5 – NOT USED

DIVISION 6 – WOOD WORK

06100 Rough Carpentry

DIVISION 7 THRU 13 – NOT USED

PART 5 – DRAWINGS (Bound Separately)

PART 1 – BIDDING REQUIREMENTS

MALCOLM PAGE District 1 | JIM MOODY District 2 | FRANK RUSSELL District 3 | PAM FEAGLE District 4 | THOMAS DEMPS District 5

TAYLOR COUNTY
BOARD OF COUNTY COMMISSIONERS

ANNIE MAE MURPHY, Clerk
Post Office Box 620
Perry, Florida 32348
(850) 838-3506 Phone
(850) 838-3549 Fax

TED LAKEY, County Administrator
201 East Green Street
Perry, Florida 32347
(850) 838-3500, extension 7 Phone
(850) 838-3501 Fax

CONRAD C. BISHOP, JR., County Attorney
Post Office Box 167
Perry, Florida 32348
(850) 584-6113 Phone
(850) 584-2433 Fax

INVITATION TO BID

The Taylor County Board of County Commissioners is soliciting sealed proposals for construction of the ***Hodges Park - Pier Reconstruction***.

Qualified firms or individuals desiring to provide the required products or services must submit five (5) packages in a sealed envelope or similar package marked "***Sealed Proposal for Hodges Park - Pier Reconstruction***" to the Clerk of Court, 1st Floor Courthouse, 108 North Jefferson Street, Suite 102, Perry, Florida 32347, to arrive no later than 4:00 P.M., local time, on April 28, 2017. **All Proposals MUST have the respondent's name and mailing address clearly shown on the outside of the envelope or package when submitted.** Proposals will be opened and respondents announced at 6:xx P.M. local time, or as soon thereafter as practical, on May 1, 2017, in the Taylor County Administrative Complex, 201 East Green Street, Perry, Florida 32347.

RFP information may be obtained from the Clerk of Court, 1st. Floor Courthouse, 108 North Jefferson Street, Suite 102, Perry, Florida 32347, (850) 838-3506 or on-line at http://www.taylorcountygov.com/Bids/Index.htm.

The County reserves the right, in its sole and absolute discretion, to reject any or all Proposals, to cancel or withdraw this solicitation at any time and waive any irregularities in the RFP process. The County reserves the right to award any contract to the respondent which it deems to offer the best overall service; therefore, the County is not bound to award any contract(s) based on the lowest quoted price. The County, in its sole and absolute discretion, also reserves the right to waive any minor defects in the process and to accept the proposal deemed to be in the County's best interest. **No faxed Proposals will be accepted.**

Additional information may be obtained from:
Taylor County Engineering Department
201 East Green Street
Perry, FL 32347
(850) 838-3500

BY ORDER OF THE BOARD OF COUNTY COMMISSIONERS, Taylor County, Florida

INSTRUCTIONS TO BIDDERS

TABLE OF CONTENTS

ARTICLE 1 - DEFINED TERMS....1
ARTICLE 2 - COPIES OF BIDDING DOCUMENTS....1
ARTICLE 3 - QUALIFICATIONS OF BIDDERS....2
ARTICLE 4 - EXAMINATION OF BIDDING DOCUMENTS, OTHER RELATED DATA, AND SITE....2
ARTICLE 5 - PRE-BID CONFERENCE....4
ARTICLE 6 - SITE AND OTHER AREAS....4
ARTICLE 7 - INTERPRETATIONS AND ADDENDA....4
ARTICLE 8 - BID SECURITY....5
ARTICLE 9 - CONTRACT TIMES....5
ARTICLE 10 - LIQUIDATED DAMAGES....5
ARTICLE 11 - SUBSTITUTE AND "OR-EQUAL" ITEMS....5
ARTICLE 12 - SUBCONTRACTORS, SUPPLIERS, AND OTHERS....5
ARTICLE 13 - PREPARATION OF BID....6
ARTICLE 14 - BASIS OF BID; COMPARISON OF BIDS....7
ARTICLE 15 - SUBMITTAL OF BID....7
ARTICLE 16 - MODIFICATION AND WITHDRAWAL OF BID....8
ARTICLE 17 - OPENING OF BIDS....8
ARTICLE 18 - BIDS TO REMAIN SUBJECT TO ACCEPTANCE....8
ARTICLE 19 – EVALUATION OF BIDS AND AWARD OF CONTRACT....8
ARTICLE 20 - CONTRACT SECURITY AND INSURANCE....9
ARTICLE 21 - SIGNING OF AGREEMENT....10
ARTICLE 22 - SALES AND USE TAXES....10
ARTICLE 23 - RETAINAGE....10
ARTICLE 24 - CONTRACTS TO BE ASSIGNED....10

ARTICLE 1 - DEFINED TERMS

1.01 Terms used in these Instructions to Bidders have the meanings indicated in the General Conditions and Supplementary Conditions. Additional terms used in these Instructions to Bidders have the meanings indicated below:

A. *Issuing Office*--The office from which the Bidding Documents are to be issued and where the bidding procedures are to be administered. The issuing office for this project will be the *Taylor County Clerk of Courts located at 1st Floor Courthouse, 108 N. Jefferson St., Suite 102, Perry, FL*. Bidding procedures will be administered at the *Taylor County Administrative Complex located at 201 East Green St., Perry, FL.*

B. *Bidder*-- One who submits a Bid directly to Owner as distinct from a sub-bidder, who submits a bid to Bidder.

C. *Successful Bidder*--The lowest, responsible and responsive Bidder to whom Owner (on the basis of Owner's evaluation as hereinafter provided) makes an award.

ARTICLE 2 - COPIES OF BIDDING DOCUMENTS

2.01 Complete sets of the Bidding Documents in the number and for the deposit sum, if any, stated in the Advertisement or Invitation to Bid may be obtained from the Issuing Office.

Copyright © 2002 National Society of Professional Engineers for EJCDC. All rights reserved.

2.02 Complete sets of Bidding Documents shall be used in preparing Bids; neither Owner nor Engineer assumes any responsibility for errors or misinterpretations resulting from the use of incomplete sets of Bidding Documents.

2.03 Owner and Engineer, in making copies of Bidding Documents available on the above terms, do so only for the purpose of obtaining Bids for the Work and do not confer a license or grant for any other use.

ARTICLE 3 - QUALIFICATIONS OF BIDDERS

3.01 To demonstrate Bidder's qualifications to perform the Work, ~~within five days of Owner's request~~, Bidder shall submit written evidence such as financial data, previous experience, present commitments, and such other data as may be called for below.

[A. Valid Business/Contractor Licensing/Registration Information]

[B. The successful Contractor and any subcontractors shall enroll in and be in compliance with the Department of Homeland Security's E-Verify Employment Eligibility Verification system prior to contract execution.]

ARTICLE 4 - EXAMINATION OF BIDDING DOCUMENTS, OTHER RELATED DATA, AND SITE

4.01 *Subsurface and Physical Conditions*

A. The Supplementary Conditions identify:

1. Those reports of explorations and tests of subsurface conditions at or contiguous to the Site that Engineer has used in preparing the Bidding Documents.

2. Those drawings of physical conditions in or relating to existing surface and subsurface structures at or contiguous to the Site (except Underground Facilities) that Engineer has used in preparing the Bidding Documents.

B. Copies of reports and drawings referenced in Paragraph 4.01.A will be made available by Owner to any Bidder on request. Those reports and drawings are not part of the Contract Documents, but the "technical data" contained therein upon which Bidder is entitled to rely as provided in Paragraph 4.02 of the General Conditions has been identified and established in Paragraph 4.02 of the Supplementary Conditions. Bidder is responsible for any interpretation or conclusion Bidder draws from any "technical data" or any other data, interpretations, opinions or information contained in such reports or shown or indicated in such drawings.

4.02 *Underground Facilities*

A. Information and data shown or indicated in the Bidding Documents with respect to existing Underground Facilities at or contiguous to the Site is based upon information and data furnished to Owner and Engineer by owners of such Underground Facilities, including Owner, or others.

4.03 *Hazardous Environmental Condition*

A. The Supplementary Conditions identify those reports and drawings relating to a Hazardous Environmental Condition identified at the Site, if any, that Engineer has used in preparing the Bidding Documents.

Copyright © 2002 National Society of Professional Engineers for EJCDC. All rights reserved.

B. Copies of reports and drawings referenced in Paragraph 4.03.A will be made available by Owner to any Bidder on request. Those reports and drawings are not part of the Contract Documents, but the "technical data" contained therein upon which Bidder is entitled to rely as provided in Paragraph 4.06 of the General Conditions has been identified and established in Paragraph 4.06 of the Supplementary Conditions. Bidder is responsible for any interpretation or conclusion Bidder draws from any "technical data" or any other data, interpretations, opinions, or information contained in such reports or shown or indicated in such drawings.

4.04 Provisions concerning responsibilities for the adequacy of data furnished to prospective Bidders with respect to subsurface conditions, other physical conditions and Underground Facilities, and possible changes in the Bidding Documents due to differing or unanticipated conditions appear in Paragraphs 4.02, 4.03, and 4.04 of the General Conditions. Provisions concerning responsibilities for the adequacy of data furnished to prospective Bidders with respect to a Hazardous Environmental Condition at the Site, if any, and possible changes in the Contract Documents due to any Hazardous Environmental Condition uncovered or revealed at the Site which was not shown or indicated in the Drawings or Specifications or identified in the Contract Documents to be within the Scope of the Work appear in Paragraph 4.06 of the General Conditions.

4.05 On request, Owner will provide Bidder access to the Site to conduct such examinations, investigations, explorations, tests, and studies as Bidder deems necessary for submission of a Bid. Bidder shall fill all holes and clean up and restore the Site to its former condition upon completion of such explorations, investigations, tests, and studies. Bidder shall comply with all applicable Laws and Regulations relative to excavation and utility locates.

4.06 Reference is made to Article 7 of the Supplementary Conditions for the identification of the general nature of other work that is to be performed at the Site by Owner or others (such as utilities and other prime contractors) that relates to the Work contemplated by these Bidding Documents. On request, Owner will provide to each Bidder for examination access to or copies of Contract Documents (other than portions thereof related to price) for such other work.

4.07 It is the responsibility of each Bidder before submitting a Bid to:

A. examine and carefully study the Bidding Documents, the other related data identified in the Bidding Documents, and any Addenda;

B. visit the Site and become familiar with and satisfy Bidder as to the general, local, and Site conditions that may affect cost, progress, and performance of the Work;

C. become familiar with and satisfy Bidder as to all federal, state, and local Laws and Regulations that may affect cost, progress, and performance of the Work;

D. carefully study all: (1) reports of explorations and tests of subsurface conditions at or contiguous to the Site and all drawings of physical conditions in or relating to existing surface or subsurface structures at or contiguous to the Site (except Underground Facilities) which have been identified in the Supplementary Conditions as provided in Paragraph 4.02 of the General Conditions, and (2) reports and drawings of Hazardous Environmental Conditions at the Site which have been identified in the Supplementary Conditions as provided in Paragraph 4.06 of the General Conditions;

E. obtain and carefully study (or accept consequences of not doing so) all additional or supplementary examinations, investigations, explorations, tests, studies, and data concerning conditions (surface, subsurface, and Underground Facilities) at or contiguous to the Site which may affect cost, progress, or performance of the Work or which relate to any aspect of the means, methods, techniques, sequences, and procedures of construction to be employed by Bidder, including applying any specific means, methods, techniques, sequences, and procedures of construction expressly required by the Bidding Documents, and safety precautions and programs incident thereto;

F. agree at the time of submitting its Bid that no further examinations, investigations, explorations, tests, studies, or data are necessary for the determination of its Bid for performance of the Work at the price(s) bid and within the times and in accordance with the other terms and conditions of the Bidding Documents;

Copyright © 2002 National Society of Professional Engineers for EJCDC. All rights reserved.

G. become aware of the general nature of the work to be performed by Owner and others at the Site that relates to the Work as indicated in the Bidding Documents;

H. correlate the information known to Bidder, information and observations obtained from visits to the Site, reports and drawings identified in the Bidding Documents, and all additional examinations, investigations, explorations, tests, studies, and data with the Bidding Documents;

I. promptly give Engineer written notice of all conflicts, errors, ambiguities, or discrepancies that Bidder discovers in the Bidding Documents and confirm that the written resolution thereof by Engineer is acceptable to Bidder; and

J. determine that the Bidding Documents are generally sufficient to indicate and convey understanding of all terms and conditions for the performance of the Work.

4.08 The submission of a Bid will constitute an incontrovertible representation by Bidder that Bidder has complied with every requirement of this Article 4, that without exception the Bid is premised upon performing and furnishing the Work required by the Bidding Documents and applying any specific means, methods, techniques, sequences, and procedures of construction that may be shown or indicated or expressly required by the Bidding Documents, that Bidder has given Engineer written notice of all conflicts, errors, ambiguities, and discrepancies that Bidder has discovered in the Bidding Documents and the written resolutions thereof by Engineer are acceptable to Bidder, and that the Bidding Documents are generally sufficient to indicate and convey understanding of all terms and conditions for performing and furnishing the Work.

ARTICLE 5 - PRE-BID CONFERENCE

5.01 A pre-Bid conference will be held at *10:00 a.m.* local time on Wednesday April 19, 2017, at the Taylor County Administrative Complex, 201 East Green St., Perry, Florida 32347. Representatives of Owner and Engineer will be present to discuss the Project. Bidders are encouraged to attend and participate in the conference. Engineer will transmit to all prospective Bidders of record such Addenda as Engineer considers necessary in response to questions arising at the conference and or no less than 10 days prior to the Bid Opening Date. Oral statements may not be relied upon and will not be binding or legally effective.

ARTICLE 6 - SITE AND OTHER AREAS

6.01 The Site is identified in the Bidding Documents. Easements for permanent structures or permanent changes in existing facilities are to be obtained and paid for by Owner unless otherwise provided in the Bidding Documents. All additional lands and access thereto required for temporary construction facilities, construction equipment, or storage of materials and equipment to be incorporated in the Work are to be obtained and paid for by Contractor.

ARTICLE 7 - INTERPRETATIONS AND ADDENDA

7.01 All questions about the meaning or intent of the Bidding Documents are to be submitted to the Project Manager or Engineer in writing. Interpretations or clarifications considered necessary by Engineer in response to such questions will be issued by Addenda mailed or delivered to all parties recorded by Engineer as having received the Bidding Documents. Questions received less than ten (10) days prior to the date for opening of Bids may not be answered. Only questions answered by Addenda will be binding. Oral and other interpretations or clarifications will be without legal effect.

Copyright © 2002 National Society of Professional Engineers for EJCDC. All rights reserved.

7.02 Addenda may be issued to clarify, correct, or change the Bidding Documents as deemed advisable by Owner or Engineer.

ARTICLE 8 - BID SECURITY

8.01 Bid security will be required for this project.

8.02 When required, A Bid must be accompanied by Bid security made payable to Owner in an amount of Five percent (5%) of Bidder's maximum Bid price and in the form of a certified check or bank money order or a Bid bond (on the form attached) issued by a surety meeting the requirements of Paragraphs 5.01 and 5.02 of the General Conditions.

8.03 The Bid security of the Successful Bidder will be retained until such Bidder has executed the Contract Documents, furnished the required contract security and met the other conditions of the Notice of Award, whereupon the Bid security will be returned. If the Successful Bidder fails to execute and deliver the Contract Documents and furnish the required contract security within 15 days after the Notice of Award, Owner may annul the Notice of Award and the Bid security of that Bidder will be forfeited. The Bid security of other Bidders whom Owner believes to have a reasonable chance of receiving the award may be retained by Owner until the earlier of seven days after the Effective Date of the Agreement or 61 days after the Bid opening, whereupon Bid security furnished by such Bidders will be returned.

8.04 Bid security of other Bidders whom Owner believes do not have a reasonable chance of receiving the award will be returned within seven days after the Bid opening.

ARTICLE 9 - CONTRACT TIMES

9.01 The number of days within which, or the dates by which, the Work is to be substantially completed and ready for final payment are set forth in the Agreement.

ARTICLE 10 - LIQUIDATED DAMAGES

10.01 Provisions for liquidated damages, if any, are set forth in the Agreement.

ARTICLE 11 - SUBSTITUTE AND "OR-EQUAL" ITEMS

11.01 The Contract, if awarded, will be on the basis of materials and equipment specified or described in the Bidding Documents without consideration of possible substitute or "or-equal" items. Whenever it is specified or described in the Bidding Documents that a substitute or "or-equal" item of material or equipment may be furnished or used by Contractor if acceptable to Engineer, application for such acceptance will not be considered by Engineer until after the Effective Date of the Agreement.

ARTICLE 12 - SUBCONTRACTORS, SUPPLIERS, AND OTHERS

12.01 If the Bid Form or Supplementary Conditions require the identity of certain Subcontractors, Suppliers, individuals, or entities to be submitted to Owner in advance of a specified date prior to the Effective Date of the Agreement, the apparent Successful Bidder, and any other Bidder so requested, shall within five days after Bid opening,

Copyright © 2002 National Society of Professional Engineers for EJCDC. All rights reserved.

submit to Owner a list of all such Subcontractors, Suppliers, individuals, or entities proposed for those portions of the Work for which such identification is required. Such list shall be accompanied by an experience statement with pertinent information regarding similar projects and other evidence of qualification for each such Subcontractor, Supplier, individual, or entity if requested by Owner. If Owner or Engineer, after due investigation, has reasonable objection to any proposed Subcontractor, Supplier, individual, or entity, Owner may, before the Notice of Award is given, request apparent Successful Bidder to submit a substitute, without an increase in the Bid.

12.02 If apparent Successful Bidder declines to make any such substitution, Owner may award the Contract to the next lowest Bidder that proposes to use acceptable Subcontractors, Suppliers, individuals, or entities. Declining to make requested substitutions will not constitute grounds for forfeiture of the Bid security of any Bidder. Any Subcontractor, Supplier, individual, or entity so listed and against which Owner or Engineer makes no written objection prior to the giving of the Notice of Award will be deemed acceptable to Owner and Engineer subject to revocation of such acceptance after the Effective Date of the Agreement as provided in Paragraph 6.06 of the General Conditions.

12.03 Contractor shall not be required to employ any Subcontractor, Supplier, individual, or entity against whom Contractor has reasonable objection.

12.04 Contractor shall not award work to Subcontractor(s) in excess of the limits stated in SC 6.06.

12.05 Any proposed Subcontractors shall provide proof of current licensure in the related trade category for the work they will be performing. Further, all proposed Subcontractors shall be required to meet the same insurance requirements as that required for the Bidder either through an employee relationship or separate coverage. Failure to provide proof of current licensure and/or insurance will be considered a violation of contract terms and conditions and result in termination of award.

ARTICLE 13 - PREPARATION OF BID

13.01 The Bid Form is included with the Bidding Documents. Additional copies may be obtained from Engineer or the Issuing Office.

13.02 All blanks on the Bid Form shall be completed by printing in ink or by typewriter and the Bid signed in ink. Erasures or alterations shall be initialed in ink by the person signing the Bid Form. A Bid price shall be indicated for each [section, Bid item, alternative, adjustment unit price item, and unit price item] listed therein, or the words "No Bid," "No Change," or "Not Applicable" entered.

13.03 A Bid by a corporation shall be executed in the corporate name by the president or a vice-president or other corporate officer accompanied by evidence of authority to sign. The corporate seal shall be affixed and attested by the secretary or an assistant secretary. The corporate address and state of incorporation shall be shown below the signature.

13.04 A Bid by a partnership shall be executed in the partnership name and signed by a partner (whose title must appear under the signature), accompanied by evidence of authority to sign. The official address of the partnership shall be shown below the signature.

13.05 A Bid by a limited liability company shall be executed in the name of the firm by a member and accompanied by evidence of authority to sign. The state of formation of the firm and the official address of the firm shall be shown below the signature.

13.06 A Bid by an individual shall show the Bidder's name and official address.

13.07 A Bid by a joint venture shall be executed by each joint venturer in the manner indicated on the Bid Form. The official address of the joint venture shall be shown below the signature.

Copyright © 2002 National Society of Professional Engineers for EJCDC. All rights reserved.

13.08 All names shall be typed or printed in ink below the signatures.

13.09 The Bid shall contain an acknowledgment of receipt of all Addenda, the numbers of which shall be filled in on the Bid Form.

13.10 The address and telephone number for communications regarding the Bid shall be shown.

13.11 The Bid shall contain evidence of Bidder's authority and qualification to do business in the state where the Project is located or covenant to obtain such qualification prior to award of the Contract. Bidder's state contractor license number, if any, shall also be shown on the Bid Form.

ARTICLE 14 - BASIS OF BID; COMPARISON OF BIDS

14.01 *Lump Sum*

A. Bidders shall submit a Bid on a lump sum basis for the base Bid and include a separate price for each alternate described in the Bidding Documents as provided for in the Bid Form. The price for each alternate will be the amount [added to] *[or]* [deleted from] the base Bid if Owner selects the alternate. In the comparison of Bids, alternates will be applied in the same order as listed in the Bid form.

14.02 The Bid price shall include such amounts as the Bidder deems proper for overhead and profit on account of cash allowances, if any, named in the Contract Documents as provided in Paragraph 11.02 of the General Conditions.

14.03 Bid prices will be compared after adjusting for differences in the time designated by Bidders for Substantial Completion. The adjusting amount will be determined at the rate set forth in the Contract Documents for liquidated damages for failing to achieve Substantial Completion for each day before or after the desired date appearing in Article 9.

ARTICLE 15 - SUBMITTAL OF BID

15.01 With each copy of the Bidding Documents, a Bidder is furnished one separate unbound copy of the Bid Form, and, if required, the Bid Bond Form. The unbound copy of the Bid Form is to be completed and submitted with the Bid security and the following data:

[A. Bid Bond (5%)]

[B. Certificates of Liability Insurance or Agency Statement]

[C. Declaration Page from Workers' Compensation Insurance or Exemption Certificate issued by the State]

[D. Workers' Compensation Hold Harmless Agreement (Required when submitting a W.C. exemption)]

[E. Public Entity Crimes Affidavit, signed and notarized, as required by Chapter 287.133(3)(a)]

[F. Non-Collusion Affidavit

[G. Valid Business/Contractor Licensing/Registration Information

[H. Proof of Contractor and any subcontractors enrollment in and compliance with the Department of Homeland Security's E-Verify Employment Eligibility Verification system or a statement that such compliance will be prior achieved prior to contract execution.]

Copyright © 2002 National Society of Professional Engineers for EJCDC. All rights reserved.

[I. List of Proposed Subcontractors and portion of work provided (Include: Scope of proposed Work, Value of work, % of total)

[J. List of Proposed Suppliers (Include: List of proposed supplies, Value of supplies, % of total)

[K. List of Project References (Include: Project Cost, Completion date, Owner Contact information, etc.)

15.02 A Bid shall be submitted no later than the date and time prescribed and at the place indicated in the Advertisement or Invitation to Bid and shall be enclosed in an opaque sealed envelope plainly marked with the Project title (and, if applicable, the designated portion of the Project for which the Bid is submitted), the name and address of Bidder, and shall be accompanied by the Bid security (when required) and other required documents. If a Bid is sent by mail or other delivery system, the sealed envelope containing the Bid shall be enclosed in a separate envelope plainly marked on the outside with the notation "***Sealed Proposal for Hodges Park - Pier Reconstruction***." Hand deliveries and mailed Bids shall be addressed to Clerk of Court, 1st Floor Courthouse, 108 North Jefferson Street, Suite 102, Perry, Florida 32347. Bids submitted by Overnight delivery shall also be delivered to the physical address of the Clerk of Court: Clerk of Court, 1st Floor Courthouse, 108 North Jefferson Street, Suite 102, Perry, Florida 32347.

15.03 The Taylor County Board of County Commissioners **DOES NOT ACCEPT FAXED PROPOSALS**.

15.04 Proposals that are not delivered to the place indicated in the Advertisement or Invitation to Bid prior to the date and time prescribed shall not be considered and will be returned to the responder unopened.

15.05 Incomplete Bid proposals that do not provide the required information and/or the required number of copies, may be deemed incomplete by the Board of County Commissioners and not considered during the Bid Evaluation.

ARTICLE 16 - MODIFICATION AND WITHDRAWAL OF BID

16.01 A Bid may be modified or withdrawn by an appropriate document duly executed in the manner that a Bid must be executed and delivered to the place where Bids are to be submitted prior to the date and time for the opening of Bids.

16.02 Once opened, no Bid may be withdrawn prior to the Board of County Commissioners action without written consent of the Clerk of Court.

ARTICLE 17 - OPENING OF BIDS

17.01 Bids will be opened at the time and place indicated in the Advertisement or Invitation to Bid and, unless obviously non-responsive, read aloud publicly. An abstract of the amounts of the base Bids and major alternates, if any, will be made available to Bidders after the opening of Bids.

ARTICLE 18 - BIDS TO REMAIN SUBJECT TO ACCEPTANCE

18.01 All Bids will remain subject to acceptance for the period of time stated in the Bid Form, but Owner may, in its sole discretion, release any Bid and return the Bid security prior to the end of this period.

ARTICLE 19 – EVALUATION OF BIDS AND AWARD OF CONTRACT

Copyright © 2002 National Society of Professional Engineers for EJCDC. All rights reserved.

19.01 Owner reserves the right, in its sole and absolute discretion, to reject any or all Bids, to cancel or withdraw this bid solicitation at any time and waive any irregularities in the Bid process. Owner reserves the right to award any contract to the respondent which it deems to offer the best overall service; therefore, Owner is not bound to award any contract based on the lowest quoted price. Owner, in its sole and absolute discretion, also reserves the right to waive any minor defects in the process and to accept the bid deemed to be in the County's best interest.

19.02 Owner, in its sole and absolute discretion, also reserves the right to assign a local business preference in a maximum amount of five (5) percent of the bid price pursuant to Taylor County Ordinance No. 2003-12.

19.03 More than one Bid for the same Work from an individual or entity under the same or different names will not be considered. Reasonable grounds for believing that any Bidder has an interest in more than one Bid for the Work may be cause for disqualification of that Bidder and the rejection of all Bids in which that Bidder has an interest.

19.04 In evaluating Bids, Owner will consider whether or not the Bids comply with the prescribed requirements, and such alternates, unit prices and other data, as may be requested in the Bid Form or prior to the Notice of Award.

19.05 In evaluating Bidders, Owner will consider the qualifications of Bidders and may consider the qualifications and experience of Subcontractors, Suppliers, and other individuals or entities proposed for those portions of the Work for which the identity of Subcontractors, Suppliers, and other individuals or entities must be submitted as provided in the Supplementary Conditions.

19.06 Owner may conduct such investigations as Owner deems necessary to establish the responsibility, qualifications, and financial ability of Bidders, proposed Subcontractors, Suppliers, individuals, or entities to perform the Work in accordance with the Contract Documents.

19.07 If the Contract is to be awarded, Owner will award the Contract to the Bidder whose Bid is in the best interests of the Project.

ARTICLE 20 - CONTRACT SECURITY AND INSURANCE

20.01 Article 5 of the General Conditions, as may be modified by the Supplementary Conditions, sets forth Owner's requirements as to performance and payment bonds and insurance. When the Successful Bidder delivers the executed Agreement to Owner, it shall be accompanied by such bonds.

20.02 All Proposals submitted require General Liability and Workmen's Compensation Insurance (State and Federal Longshoreman's), and must include a Certificate of Insurance showing the coverage(s) required, listing Taylor County as an additional insured, or a sworn statement from an insurance agent, verifying that if the prospective respondent is awarded the bid, a Certificate of Insurance will be issued to the successful respondent within thirty (30) days of the acceptance of the proposal, in the amount stated. Also include the Declaration Page from the insurance policy, showing Workmen's Compensation Insurance on all employees working on the project. Any respondent, who does not furnish the required insurance documents within thirty (30) days after the bid award, is hereby advised that the bid will be given to the next lowest respondent who meets all proposal specifications. Workers' Compensation exemptions will be accepted upon providing a current certificate, Articles of Incorporation, and a signed Taylor County Workers' Compensation Hold Harmless Agreement. Any responder who does not furnish the required insurance documents will not be considered.

Copyright © 2002 National Society of Professional Engineers for EJCDC. All rights reserved.

ARTICLE 21 - SIGNING OF AGREEMENT

21.01 When Owner gives a Notice of Award to the Successful Bidder, it shall be accompanied by the required number of unsigned counterparts of the Agreement with the other Contract Documents which are identified in the Agreement as attached thereto. Within 15 days thereafter, Successful Bidder shall sign and deliver the required number of counterparts of the Agreement and attached documents to Owner. Within ten days thereafter, Owner shall deliver one fully signed counterpart to Successful Bidder with a complete set of the Drawings with appropriate identification.

ARTICLE 22 - SALES AND USE TAXES

22.01 Owner is exempt from Florida state sales and use taxes on all Direct Purchased materials and equipment to be incorporated in the Work. Said taxes for such items shall not be included in the Bid. Refer to Paragraph SC-6.10 of the Supplementary Conditions for additional information.

22.02 Owner is exempt from payment of sales and compensating use taxes of the State of Florida and of cities and counties thereof on all materials to be incorporated into the Work which are Direct Purchased by Owner. Contractor purchases are not eligible for this exemption and such costs shall be accounted for within the Bid.

1. Owner will furnish the required certificates of tax exemption to Contractor for use in the purchase of Direct Purchased supplies and materials to be incorporated into the Work.

2. Owner's exemption does not apply to supplies, materials, or construction tools, machinery, equipment, or other property purchased by or leased by Contractor, or to supplies or materials not incorporated into the Work.

ARTICLE 23 - RETAINAGE

23.01 Provisions concerning Contractor's rights to deposit securities in lieu of retainage are set forth in the Agreement.

ARTICLE 24 - CONTRACTS TO BE ASSIGNED

24.01 Owner as "buyer" will execute a contract with the successful Bidder as "seller" for the procurement of goods and special services for *Hodges Park - Pier Reconstruction* project. The materials and equipment provided for in the procurement contract are to be furnished and delivered to the Site [or other location] for installation by Contractor. The said procurement contract will be assigned by Owner to Contractor as set forth in the Agreement. Contractor will accept the assignment and assume responsibility for the "seller", who will become a Subcontractor to Contractor.

24.02 Bidders may examine the contract documents for the procurement of goods and special services for Project at the Issuing Office.

Copyright © 2002 National Society of Professional Engineers for EJCDC. All rights reserved.

BID FORM

Hodges Park - Pier Reconsrtuction

2017-001-ENG

TABLE OF ARTICLES

Article	Article No.
ARTICLE 1 – BID RECIPIENT	1
ARTICLE 2 – BIDDER'S ACKNOWLEDGEMENTS	1
ARTICLE 3 – BIDDER'S REPRESENTATIONS	1
ARTICLE 4 – FURTHER REPRESENTATIONS	2
ARTICLE 5 – BASIS OF BID	3
ARTICLE 6 – TIME OF COMPLETION	3
ARTICLE 7 – ATTACHMENTS TO THIS BID	3
ARTICLE 8 – DEFINED TERMS	4
ARTICLE 9 – BID SUBMITTAL	4

ARTICLE 1 – BID RECIPIENT

1.01 This Bid is submitted to:

Taylor County Board of County Commissioners
Clerk of Court
1st Floor Courthouse, Suite 102
108 North Jefferson St.
Perry, Florida 32347

1.02 The undersigned Bidder proposes and agrees, if this Bid is accepted, to enter into an Agreement with Owner in the form included in the Bidding Documents to perform all Work as specified or indicated in the Bidding Documents for the prices and within the times indicated in this Bid and in accordance with the other terms and conditions of the Bidding Documents.

ARTICLE 2 – BIDDER'S ACKNOWLEDGEMENTS

2.01 Bidder accepts all of the terms and conditions of the Instructions to Bidders, including without limitation those dealing with the disposition of Bid security. This Bid will remain subject to acceptance for 60 days after the Bid opening, or for such longer period of time that Bidder may agree to in writing upon request of Owner.

ARTICLE 3 – BIDDER'S REPRESENTATIONS

3.01 In submitting this Bid, Bidder represents that:

A. Bidder has examined and carefully studied the Bidding Documents, the other related data identified in the Bidding Documents, and the following Addenda, receipt of which is hereby acknowledged.

Addendum No.	Addendum Date
_____	_____
_____	_____

Copyright © 2002 National Society of Professional Engineers for EJCDC. All rights reserved.

B. Bidder has visited the Site and become familiar with and is satisfied as to the general, local and Site conditions that may affect cost, progress, and performance of the Work.

C. Bidder is familiar with and is satisfied as to all federal, state and local Laws and Regulations that may affect cost, progress and performance of the Work.

D. Bidder has carefully studied all: (1) reports of explorations and tests of subsurface conditions at or contiguous to the Site and all drawings of physical conditions in or relating to existing surface or subsurface structures at or contiguous to the Site (except Underground Facilities) which have been identified in SC-4.02, and (2) reports and drawings of Hazardous Environmental Conditions that have been identified in SC-4.06.

E. Bidder has obtained and carefully studied (or accepts the consequences for not doing so) all additional or supplementary examinations, investigations, explorations, tests, studies and data concerning conditions (surface, subsurface and Underground Facilities) at or contiguous to the Site which may affect cost, progress, or performance of the Work or which relate to any aspect of the means, methods, techniques, sequences, and procedures of construction to be employed by Bidder, including applying the specific means, methods, techniques, sequences, and procedures of construction expressly required by the Bidding Documents to be employed by Bidder, and safety precautions and programs incident thereto.

F. Bidder does not consider that any further examinations, investigations, explorations, tests, studies, or data are necessary for the determination of this Bid for performance of the Work at the price(s) bid and within the times and in accordance with the other terms and conditions of the Bidding Documents.

G. Bidder is aware of the general nature of work to be performed by Owner and others at the Site that relates to the Work as indicated in the Bidding Documents.

H. Bidder has correlated the information known to Bidder, information and observations obtained from visits to the Site, reports and drawings identified in the Bidding Documents, and all additional examinations, investigations, explorations, tests, studies, and data with the Bidding Documents.

I. Bidder has given Engineer written notice of all conflicts, errors, ambiguities, or discrepancies that Bidder has discovered in the Bidding Documents, and the written resolution thereof by Engineer is acceptable to Bidder.

J. The Bidding Documents are generally sufficient to indicate and convey understanding of all terms and conditions for the performance of the Work for which this Bid is submitted.

K. Bidder will submit written evidence of its authority to do business in the state where the Project is located not later than the date of its execution of the Agreement.

ARTICLE 4 – FURTHER REPRESENTATIONS

4.01 Bidder further represents that:

A. this Bid is genuine and not made in the interest of or on behalf of any undisclosed individual or entity and is not submitted in conformity with any agreement or rules of any group, association, organization or corporation;

B. Bidder has not directly or indirectly induced or solicited any other Bidder to submit a false or sham Bid;

C. Bidder has not solicited or induced any individual or entity to refrain from bidding; and

D. Bidder has not sought by collusion to obtain for itself any advantage over any other Bidder or over Owner.

Copyright © 2002 National Society of Professional Engineers for EJCDC. All rights reserved.

ARTICLE 5 – BASIS OF BID

5.01 Bidder will complete the Work in accordance with the Contract Documents for the following price(s):

Total Lump Sum Bid Price	_____	$_____
150 Total Contract Days	(words)	(numerals)
	_____	

Any and all specified cash allowances are included in the price(s) set forth above and have been computed in accordance with Paragraph 11.02 of the General Conditions.

Bidder acknowledges that estimated quantities are not guaranteed, and are solely for the purpose of comparison of Bids, and final payment for all Unit Price Bid items will be based on actual quantities, determined as provided in the Contract Documents.

Bidder also acknowledges that the award of this project or any portion thereof will be contingent upon the availability of funds. If funding is not available to award the project in its entirety, the Board of County Commissioners reserves the right to award portions thereof so as to remain within available funding. Such partial award will not relieve the Bidder from complying with the full requirements of the awarded portions as more specifically detailed within these specifications.

ARTICLE 6 – TIME OF COMPLETION

6.01 Bidder agrees that the Work will be substantially complete and will be completed and ready for final payment in accordance with Paragraph 14.07.B of the General Conditions on or before the dates or within the number of calendar days indicated in the Agreement.

6.02 Bidder accepts the provisions of the Agreement as to liquidated damages in the event of failure to complete the Work within the Contract Times.

ARTICLE 7 – ATTACHMENTS TO THIS BID

7.01 The following documents are attached to and made a condition of this Bid:

A. Required Bid security in the form of _____

B. Certificate of Liability Insurance or Agency Statement

C. Declaration Page form Workers' Compensation Insurance or Exemption Issued by the State of Florida

D. Workers' Compensation Hold Harmless Agreement (Required when submitting a W.C. exemption)

E. Public Entity Crimes Affidavit, signed and notarized, as required by Chapter 287.133(3)(a), F.S.

F. Non-Collusion Affidavit

G. Valid Business/Contractor Licensing/Registration Information

H. Proof of Contractor and any subcontractors enrollment in and compliance with the Department of Homeland Security's E-Verify Employment Eligibility Verification system or a statement that such compliance will be prior achieved prior to contract execution.

I. List of Proposed Subcontractors and portion of work provided (Include: Scope of proposed Work, Value of work, % of total)

Copyright © 2002 National Society of Professional Engineers for EJCDC. All rights reserved.

J. List of Proposed Suppliers (Include: List of proposed supplies, Value of supplies, % of total)

K. List of Project References (Include: Project Cost, Completion date, Owner Contact information, etc.)

ARTICLE 8 – DEFINED TERMS

8.01 The terms used in this Bid with initial capital letters have the meanings stated in the Instructions to Bidders, the General Conditions, and the Supplementary Conditions.

ARTICLE 9 – BID SUBMITTAL

9.01 This Bid submitted by:

If Bidder is:

An Individual

Name (typed or printed): _____

By: _____ (SEAL)
(Individual's signature)

Doing business as: _____

A Partnership

Partnership Name: _____ (SEAL)

By: _____
(Signature of general partner -- attach evidence of authority to sign)

Name (typed or printed): _____

A Corporation

Corporation Name: _____ (SEAL)

State of Incorporation: _____
Type (General Business, Professional, Service, Limited Liability):_____

By: _____
(Signature -- attach evidence of authority to sign)

Name (typed or printed): _____

Title: _____ (CORPORATE SEAL)

Attest _____

Date of Authorization to do business in *FLORIDA* is _____/_____/_____.

A Joint Venture

Copyright © 2002 National Society of Professional Engineers for EJCDC. All rights reserved.

Name of Joint Venture: _____

First Joint Venturer Name: _____ (SEAL)

By: _____
(Signature of first joint venture partner -- attach evidence of authority to sign)

Name (typed or printed): _____

Title: _____

Second Joint Venturer Name: _____ (SEAL)

By: _____
(Signature of second joint venture partner -- attach evidence of authority to sign)

Name (typed or printed): _____

Title: _____

(Each joint venturer must sign. The manner of signing for each individual, partnership, and corporation that is a party to the joint venture should be in the manner indicated above.)

Bidder's Business Address _____

_____

Phone No. _____ Fax No. _____

SUBMITTED on _____, 20_____.

State Contractor License No. _____. (If applicable)

Copyright © 2002 National Society of Professional Engineers for EJCDC. All rights reserved.

HOLD HARMLESS, RELEASE AND INDEMNITY AGREEMENT

COMES NOW, _____(Contractor), after having obtained a State of Florida Workers' Compensation Exemption Certificate, a copy of which is attached hereto and marked Exhibit "A", and in Consideration of Taylor County (Owner) having accepted said Worker's Compensation exemption and Owner having agreed for Contractor to proceed with the following project, to-wit:

Hodges Park - Pier Reconstruction
Taylor County, Florida

Contract: The intent of this contract is to secure all labor, equipment and materials required for the Hodges Park - Pier Reconstruction project in Taylor County, Florida. This project includes complete removal and salvage/disposal of portions of the existing structure debris and new construction of a wooden piling pier as more fully detailed in the project plans and specifications.

The term **Contractor** is hereby defined to include all owners, managing members, employees and successors contractually obligated to perform the above project.
The term **Owner** is hereby defined to include Taylor County Board of County Commissioners, it directors, employees, attorney(s), and designated representatives

1. Contractor hereby agrees to indemnify, hold harmless and defend Owner from any liability, claim, demand, action, cause of action, suit, loss, damage, expense, cost, attorney fee, settlement or judgment as a result any injury while performing the above project. I will not allow anyone to subcontract and no other person will be allowed on the job site.
2. Contractor also hereby agrees to indemnify, hold harmless and release Owner, from any liability, claim, demand, action, cause of action, suit, loss, damage, expense, cost, settlement or judgment for any medical, dental, orthopedic, surgery or any expense as a result of any injury on said project.
3. Contractor hereby agrees to release Owner from liability of whatever kind of nature as a result of any injury on the above project.

4. Contractor hereby agrees that venue of any litigation, as a result of this Hold Harmless Release and Indemnity Agreement shall be exclusively in Taylor County, Florida and the laws of the State of Florida shall govern.

5. Contractor hereby agrees that they have relied on the legal advice of an attorney and that they fully understand this agreement and have voluntarily executed same.

DONE AND EXECUTED this _____ day of _____, 20___

WITNESS:

_____ _____

_____

STATE OF _____
COUNTY OF _____

I hereby certify that on this day personally appeared before me, an officer duly authorized to administer oaths and take acknowledgments, _____, to me well known and known to me to be the individual described in and who executed the foregoing, and acknowledged before me that they executed the same freely and voluntarily for the purpose therein expressed.

Witness my hand and official seal this ____ day of _____, 20___.

_____
NOTARY PUBLIC

My Commission Expires:_____

Accepted by Taylor County, Florida this ____ day of _____, 20___

By _____.

SWORN STATEMENT UNDER SECTION 287.133(3)(a),
FLORIDA STATUTES, ON PUBLIC ENTITY CRIMES

THIS FORM MUST BE SIGNED IN THE PRESENCE OF A NOTARY PUBLIC OR OTHER OFFICER AUTHORIZED TO ADMINISTER OATHS.

1. This sworn statement is submitted with Bid, Proposal or Contract No._____

   for_____

2. This sworn statement is submitted by _____
   (Name of entity submitting sworn statement)

   Whose business address is_____

   _____and

   (if applicable) its Federal Employer Identification Number (FEIN) is_____,
   (if the entity has no FEIN, include the Social Security Number of the individual signing this sworn

   statement:_____.)

3. My name is _____ and my relationship to the entity

   name above is_____.

4. I understand that a "public entity crime" as defined in Paragraph 287.133(1)(g), Florida Statutes, means a violation of any state or federal law by a person with respect to and directly related to the transaction of business with any public entity or with an agency or political subdivision of any other state or with the United States, including, but not limited to, any bid or contract for goods or services to be provided to any public entity or an agency or political subdivision of any other state or of the United States and involving antitrust, fraud, theft, bribery, collusion, racketeering, conspiracy, or material misrepresentation.

5. I understand that "convicted" or "conviction" as defined in Paragraph 287-133(1)(b), Florida Statutes, means a finding of guilt or a conviction of a public entity crime, with or without an adjudication of guilt, in any federal or state trial court or record relating to charges brought by indictment or information after July 1, 1989, as a result of a jury verdict, nonjury verdict, nonjury trial, or entry of a plea of guilty or nolo contendere.

6. I understand that an "affiliate" as defined in Paragraph 287.133(1)(a), Florida Statutes, means:
   a. A predecessor or successor of a person convicted of a public entity crime: or
   b. An entity under the control of any natural person who is active in the management of the entity and who has been convicted of a public entity crime. The term "affiliate" includes those officers, directors, executives, partners, shareholders, employees, members, and agents who are in the management of an affiliate. The ownership by one person of shares constituting a controlling interest in another person, or a pooling of equipment or income among persons when not for fair market value under an arm's length agreement, shall be a prima facie case that one person controls another person. A person who knowingly enters into a joint venture with a person who has been convicted of a public entity crime in Florida during the preceding 36 months shall be considered an affiliate.

7. I understand that a "person" as defined in Paragraph 287.133(1)(g)(e), Florida Statutes, means any natural person or entity organized under the laws of any state or the United States with the legal power to enter into a binding contract and which bids or applies to bid on contracts for the provisions of goods or services let by a public entity, or which otherwise transacts or applies to transact business with a public entity. The term "person" includes those officers, directors, executives, partners, shareholders, employees, members, and agents who are active in management of an entity.

8. Based on information and belief, the statement, which I have marked below, is true in relation to the entity submitting this sworn statement. (Please indicate which statement applies)

_____ Neither the entity submitting this sworn statement, nor any officers, directors, executives, partners, shareholders, employees, members or agents who are active in management of the entity, nor affiliate of the entity has been charged with and convicted of a public entity crime subsequent to July 1, 1989.

_____ The entity submitting this sworn statement, or one or more of the officers, directors, executives, partners, share holders, employees, members, or agents who are active in management of the entity has been charged with and convicted of a public entity crime subsequent to July 1, 1989 AND (Please indicate which additional statement applies.)

_____ There has been a proceeding concerning the conviction before a hearing officer of the State of Florida, Division of Administrative Hearings. The final order entered by the hearing officer did not place the person or affiliate on the convicted vendor list. (Please attach a copy of the final order).

_____ The person or affiliate was placed on the convicted vendor list. There has been a subsequent proceeding before a hearing office of the State of Florida, Division of Administrative Hearings. The final order entered by the hearing officer determined that it was in the public interest to remove the person or affiliate from the convicted vendor list. (Please attach a copy of the final order.)

_____ The person or affiliate has not been placed on the convicted vendor list. (Please describe any action taken by or pending with the Department of General Services.)

_____ _____

(Signature) (Date)

STATE OF _____

COUNTY OF_____

PERSONALLY APPEARED BEFORE ME, the undersigned authority, _____,
(Name of individual signing)
who, after first being sworn by me, affixed his/her signature in the space provided above on this _____ day

of _____, _____.

_____
NOTARY PUBLIC

My commission expires: _____

NON-COLLUSION AFFIDAVIT

(STATE OF FLORIDA, COUNTY OF TAYLOR)

_____ being first duly sworn, deposes and says that:

(1) He/She/They is/are the _____ of
(Owner, Partner, Officer, Representative or Agent)
_____, the Bidder that has submitted the attached Bid;

(2) He/She/They is/are fully informed respecting the preparation and contents of the attached Bid and of all pertinent circumstances respecting such Bid;

(3) Such Bid is genuine and is not a collusive or sham Bid;

(4) Neither the said Bidder nor any of its officers, partners, owners, agents, representatives, employees or parties in interest, including this affiant, have in any way colluded, conspired, connived or agreed, directly or indirectly, with any other Bidder, firm, or person to submit a collusive or sham Bid in connection with the Work for which the attached Bid has been submitted; or to refrain from Bidding in connection with such Work; or have in any manner, directly or indirectly, sought by agreement or collusion, or communication, or conference with any Bidder, firm, or person to fix any overhead, profit, or cost elements of the Bid or of any other Bidder, or to fix any overhead, profit, or cost elements of the Bid Price or the Bid Price of any other Bidder, or to secure through any collusion, conspiracy, connivance, or unlawful agreement any advantage against (Recipient), or any person interested in the proposed Work;

(5) The price or prices quoted in the attached Bid are fair and proper and are not tainted by any collusion, conspiracy, connivance, or unlawful agreement on the part of the BIDDER or any other of its agents, representatives, owners, employees or parties of interest, including this affiant.

Signed, sealed and delivered in the presence of:

_____ By:_____
Witness Signature

_____ _____
Witness Print Name and Title

STATE OF FLORIDA, (COUNTY OF TAYLOR)
On this the _____ day of _____, _____, before me, the undersigned Notary Public of the State of Florida, personally appeared (Name(s) of individual(s) who appeared before notary)_____ and whose name(s) is/are subscribed to the within Affidavit of Non-Collusion, and he/she/they acknowledge that he/she/they executed it.

WITNESS my hand and official seal. _____
Notary Public, State of Florida

NOTARY PUBLIC:

SEAL OF OFFICE:

_____
(Name of Notary Public: Print, Stamp or type as commissioned)

____Personally known to me, or ____ Did take an oath, or

____Personal identification: ____ Did Not take an oath.

_____
Type of Identification Produced

PART 2– CONTRACT FORMS

AGREEMENT
BETWEEN OWNER AND CONTRACTOR FOR
CONSTRUCTION CONTRACT (STIPULATED PRICE)

THIS AGREEMENT is by and between Taylor County Board of County Commissioners (Owner) and

_____ (Contractor).

Owner and Contractor, in consideration of the mutual covenants set forth herein, agree as follows:

ARTICLE 1 - WORK

1.01 Contractor shall complete all Work as specified or indicated in the Contract Documents. The Work is generally described as follows:

Hodges Park - Pier Reconstruction, Taylor County, Florida. The intent of this contract is to secure all labor, equipment and materials required for the Hodges Park - Pier Reconstruction project in Taylor County, Florida. This project includes complete removal and salvage/disposal of portions of the existing structure debris and new construction of a wooden piling pier as more fully detailed in the project plans and specifications.

ARTICLE 2 - THE PROJECT

2.01 The Project for which the Work under the Contract Documents may be the whole or only a part is generally described as follows:

This project is to be a lump sum project, with any add/deduct items as specified on the Bid Proposal.

ARTICLE 3 – ENGINEER/PROJECT ADMINISTRATION

3.01 The Project has been prepared by:

Taylor County Engineering Department
201 East Green Street
Perry, Florida 32347
Phone: 850-838-3500
Fax: 850-838-3501

3.02 The Project will be administered by:

Taylor County Engineering Department
201 East Green Street
Perry, Florida 32347

(Engineer and Project Administrator), who is to act as Owner's representative, assume all duties and responsibilities, and have the rights and authority assigned to Engineer in the Contract Documents in connection with the completion of the Work in accordance with the Contract Documents.

Copyright © 2002 National Society of Professional Engineers for EJCDC. All rights reserved.

ARTICLE 4 - CONTRACT TIMES

4.01 Time of the Essence

A. All time limits for Milestones, if any, Substantial Completion, and completion and readiness for final payment as stated in the Contract Documents are of the essence of the Contract.

4.02 Days to Achieve Substantial Completion and Final Payment

A. The Work will be substantially completed within 140 days after the date when the Contract Times commence to run as provided in Paragraph 2.03 of the General Conditions, and completed and ready for final payment in accordance with Paragraph 14.07 of the General Conditions within 150 days after the date when the Contract Times commence to run.

4.03 Liquidated Damages

A. Contractor and Owner recognize that time is of the essence of this Agreement and that Owner will suffer financial loss if the Work is not completed within the times specified in Paragraph 4.02 above, plus any extensions thereof allowed in accordance with Article 12 of the General Conditions. The parties also recognize the delays, expense, and difficulties involved in proving in a legal or arbitration proceeding the actual loss suffered by Owner if the Work is not completed on time. Accordingly, instead of requiring any such proof, Owner and Contractor agree that as liquidated damages for delay (but not as a penalty), Contractor shall pay Owner an amount consistent with Section 8-10 of the FDOT Standard Specifications for each day that expires after the time specified in Paragraph 4.02 for Substantial Completion until the Work is substantially complete. After Substantial Completion, if Contractor shall neglect, refuse, or fail to complete the remaining Work within the Contract Time or any proper extension thereof granted by Owner, Contractor shall pay Owner an amount consistent with Section 8-10 of the FDOT Standard Specifications for each day that expires after the time specified in Paragraph 4.02 for completion and readiness for final payment until the Work is completed and ready for final payment.

4.04 Correction Period/Warranty

A. The Correction Period specified in Paragraph 13.07 of the General Conditions is modified to require that all workmanship and materials furnished to complete this project shall be warranted for no less than a one-year period after the date of final acceptance.

ARTICLE 5 - CONTRACT PRICE

5.01 Owner shall pay Contractor for completion of the Work in accordance with the Contract Documents an amount in current funds equal to the sum of the amounts determined pursuant to Paragraphs 5.01.A below:

A. For all Work other than Unit Price Work, a Lump Sum of:

_____ ($_____)
(words) (numerals)

All specific cash allowances are included in the above price and have been computed in accordance with paragraph 11.02 of the General Conditions.

ARTICLE 6 - PAYMENT PROCEDURES

6.01 Submittal and Processing of Payments

A. Contractor shall submit Applications for Payment in accordance with Article 14 of the General Conditions. Applications for Payment will be processed by Engineer as provided in the General Conditions.

6.02 Progress Payments; Retainage

Copyright © 2002 National Society of Professional Engineers for EJCDC. All rights reserved.

A. Owner shall make progress payments on account of the Contract Price on the basis of Contractor's Applications for Payment on or about the 10th day of each month during performance of the Work as provided in Paragraphs 6.02.A.1 and 6.02.A.2 below. All such payments will be measured by the schedule of values established as provided in Paragraph 2.07.A of the General Conditions (and in the case of Unit Price Work based on the number of units completed) or, in the event there is no schedule of values, as provided in the General Requirements:

1. Prior to Substantial Completion, progress payments will be made in an amount equal to the percentage indicated below but, in each case, less the aggregate of payments previously made and less such amounts as Engineer may determine or Owner may withhold, including but not limited to liquidated damages, in accordance with Paragraph 14.02 of the General Conditions:

a. 90% percent of Work completed (with the balance being retainage); and

b. 90% percent of cost of materials and equipment not incorporated in the Work (with the balance being retainage).

2. Upon Substantial Completion, Owner shall pay an amount sufficient to increase total payments to Contractor to 90% percent of the Work completed, less such amounts as Engineer shall determine, or OWNER may withhold, in accordance with Paragraph 14.02.B.5 of the General Conditions and less Ten percent (10%) of Engineer's estimate of the value of Work to be completed or corrected as shown on the tentative list of items to be completed or corrected attached to the certificate of Substantial Completion.

6.03 Final Payment

A. Upon final completion and acceptance of the Work in accordance with Paragraph 14.07 of the General Conditions, Owner shall pay the remainder of the Contract Price as recommended by Engineer as provided in said Paragraph 14.07.

ARTICLE 7 - INTEREST

7.01 All moneys not paid when due as provided in Article 14 of the General Conditions shall bear interest at the rate of zero percent (0%) per annum.

ARTICLE 8 – CONTRACTOR'S REPRESENTATIONS

8.01 In order to induce Owner to enter into this Agreement, Contractor makes the following representations:

A. Contractor has examined and carefully studied the Contract Documents and the other related data identified in the Bidding Documents.

B. Contractor has visited the Site and become familiar with and is satisfied as to the general, local, and Site conditions that may affect cost, progress, and performance of the Work.

C. Contractor is familiar with and is satisfied as to all federal, state, and local Laws and Regulations that may affect cost, progress, and performance of the Work.

D. Contractor has carefully studied all: (1) reports of explorations and tests of subsurface conditions at or contiguous to the Site and all drawings of physical conditions in or relating to existing surface or subsurface structures at or contiguous to the Site (except Underground Facilities) which have been identified in the Supplementary Conditions as provided in Paragraph 4.02 of the General Conditions and (2) reports and drawings of a Hazardous Environmental Condition, if any, at the Site which has been identified in the Supplementary Conditions as provided in Paragraph 4.06 of the General Conditions.

E. Contractor has obtained and carefully studied (or assumes responsibility for doing so) all additional or supplementary examinations, investigations, explorations, tests, studies, and data concerning conditions (surface, subsurface, and Underground Facilities) at or contiguous to the Site which may affect cost, progress, or performance of the Work or which relate to any

Copyright © 2002 National Society of Professional Engineers for EJCDC. All rights reserved.

aspect of the means, methods, techniques, sequences, and procedures of construction to be employed by Contractor, including any specific means, methods, techniques, sequences, and procedures of construction expressly required by the Bidding Documents, and safety precautions and programs incident thereto.

F. Contractor does not consider that any further examinations, investigations, explorations, tests, studies, or data are necessary for the performance of the Work at the Contract Price, within the Contract Times, and in accordance with the other terms and conditions of the Contract Documents.

G. Contractor is aware of the general nature of work to be performed by Owner and others at the Site that relates to the Work as indicated in the Contract Documents.

H. Contractor has correlated the information known to Contractor, information and observations obtained from visits to the Site, reports and drawings identified in the Contract Documents, and all additional examinations, investigations, explorations, tests, studies, and data with the Contract Documents.

I. Contractor has given Engineer written notice of all conflicts, errors, ambiguities, or discrepancies that Contractor has discovered in the Contract Documents, and the written resolution thereof by Engineer is acceptable to Contractor.

J. The Contract Documents are generally sufficient to indicate and convey understanding of all terms and conditions for performance and furnishing of the Work.

ARTICLE 9 - CONTRACT DOCUMENTS

9.01 Contents

A. The Contract Documents consist of the following:

1. This Agreement (pages 1 to 6, inclusive).

2. Standard General Conditions.

3. Supplementary Conditions.

4. Specifications as listed in the table of contents of the Project Manual.

5. Drawings consisting of 14 sheets with each sheet bearing the following general title: *Hodges Park - Pier Reconstruction* [or] the Drawings listed on attached sheet index.

6. Addenda (numbers 1 to _____, inclusive).

7. Exhibits to this Agreement (enumerated as follows):

   a. Contractor's Bid (pages _____ to _____, inclusive).

   b. Documentation submitted by Contractor prior to Notice of Award (pages _____ to _____, inclusive).

   c. Contractor's and Subcontractor's Valid Business/Contractor Licensing/Registration Information..

9. The following which may be delivered or issued on or after the Effective Date of the Agreement and are not attached hereto:

   a. Notice to Proceed.

   b. Work Change Directives.

Copyright © 2002 National Society of Professional Engineers for EJCDC. All rights reserved.

c. Change Order(s).

B. The documents listed in Paragraph 9.01.A are attached to this Agreement (except as expressly noted otherwise above).

C. There are no Contract Documents other than those listed above in this Article 9.

D. The Contract Documents may only be amended, modified, or supplemented as provided in Paragraph 3.04 of the General Conditions.

ARTICLE 10 - MISCELLANEOUS

10.01 Terms

A. Terms used in this Agreement will have the meanings stated in the General Conditions and the Supplementary Conditions.

10.02 Assignment of Contract

A. No assignment by a party hereto of any rights under or interests in the Contract will be binding on another party hereto without the written consent of the party sought to be bound; and, specifically but without limitation, moneys that may become due and moneys that are due may not be assigned without such consent (except to the extent that the effect of this restriction may be limited by law), and unless specifically stated to the contrary in any written consent to an assignment, no assignment will release or discharge the assignor from any duty or responsibility under the Contract Documents.

10.03 Successors and Assigns

A. Owner and Contractor each binds itself, its partners, successors, assigns, and legal representatives to the other party hereto, its partners, successors, assigns, and legal representatives in respect to all covenants, agreements, and obligations contained in the Contract Documents.

10.04 Severability

A. Any provision or part of the Contract Documents held to be void or unenforceable under any Law or Regulation shall be deemed stricken, and all remaining provisions shall continue to be valid and binding upon Owner and Contractor, who agree that the Contract Documents shall be reformed to replace such stricken provision or part thereof with a valid and enforceable provision that comes as close as possible to expressing the intention of the stricken provision.

10.05 Preference To State Residents

A. Chapter 2010-147, Section 50, Laws of Florida, providing for preference to residents of the State of Florida, is hereby made a part of this Contract: Each contract that is funded by state funds must contain a provision requiring the contractor to give preference to the employment of state residents in the performance of the work on the project if state residents have substantially equal qualifications to those of nonresidents. As used in this Section, the term "substantially equal qualifications" means the qualification of two or more persons among whom the employer cannot make a reasonable determination that the qualifications held by one person are better suited for the position than the qualifications held by the other person or persons.

10.06 Public Records Provision

A. In accordance with Section 119.0701, Florida Statutes, Contracts; Public records, Contractor shall specifically:

a. Keep and maintain public records that ordinarily and necessarily would be required by the public agency in order to perform the service.
b. Provide the public with access to public records on the same terms and conditions that the public agency would provide the records and at a cost that does not exceed the cost provided in this chapter or as otherwise provided by law.

Copyright © 2002 National Society of Professional Engineers for EJCDC. All rights reserved.

c. Ensure that public records that are exempt or confidential and exempt from public records disclosure requirements are not disclosed except as authorized by law.
d. Meet all requirements for retaining public records and transfer, at no cost, to the public agency all public records in possession of the contractor upon termination of the contract and destroy any duplicate public records that are exempt or confidential and exempt from public records disclosure requirements. All records stored electronically must be provided to the public agency in a format that is compatible with the information technology systems of the public agency.

10.07 Other Provisions

A. Venue for disputes arising from this contract shall be Taylor County, Florida.

IN WITNESS WHEREOF, Owner and Contractor have signed this Agreement in duplicate. One counterpart each has been delivered to Owner and Contractor. All portions of the Contract Documents have been signed or identified by Owner and Contractor or on their behalf.

This Agreement will be effective on _____, 2017 (which is the Effective Date of the Agreement).

OWNER:

Taylor County Board of County Commissioners

By: Ted Lakey

Title: County Administrator

[COUNTY SEAL]

Attest: Annie Mae Murphy

Title: Taylor County Clerk of Court

Address for giving notices:

108 North Jefferson St., Suite 102, Perry, FL 32347

OR

P.O. Box 620, Perry, FL 32348

(If Owner is a corporation, attach evidence of authority to sign. If Owner is a public body, attach evidence of authority to sign and resolution or other documents authorizing execution of Owner-Contractor Agreement.)

CONTRACTOR:

_____

By: _____

Title: _____

[CORPORATE SEAL]

Attest: _____

Title: _____

Address for giving notices:

_____

_____

_____

License No.: _____
(Where applicable)

Agent for service or process: _____

_____

(If Contractor is a corporation or a partnership, attach evidence of authority to sign.)

Copyright © 2002 National Society of Professional Engineers for EJCDC. All rights reserved.

BID BOND

Any singular reference to Bidder, Surety, Owner, or other party shall be considered plural where applicable.

BIDDER (Name and Address):

SURETY (Name and Address of Principal Place of Business):

OWNER (Name and Address):
TAYLOR COUNTY BOARD OF COUNTY COMMISSIONERS
108 NORTH JEFFERSON ST.
PERRY FL, 32347

BID
Bid Due Date: April 28, 2017

Project (Brief Description Including Location): *Hodges Park - Pier Reconstruction, Taylor County, Florida.* The intent of this contract is to secure all labor, equipment and materials required for the Hodges Park - Pier Reconstruction project in Taylor County, Florida. This project includes complete removal and salvage/disposal of portions of the existing structure debris and new construction of a wooden piling pier as more fully detailed in the project plans and specifications.

BOND
Bond Number:
Date (Not later than Bid due date):
Penal Sum: _____ _____
(Words) (Figures)

Surety and Bidder, intending to be legally bound hereby, subject to the terms printed on the reverse side hereof, do each cause this Bid Bond to be duly executed on its behalf by its authorized officer, agent, or representative.

BIDDER	**SURETY**
_____ (Seal)	_____ (Seal)
Bidder's Name and Corporate Seal	Surety's Name and Corporate Seal
By: _____	By: _____
Signature and Title	Signature and Title (Attach Power of Attorney)
Attest: _____	Attest: _____
Signature and Title	Signature and Title

Note: Above addresses are to be used for giving required notice.

1. Bidder and Surety, jointly and severally, bind themselves, their heirs, executors, administrators, successors, and assigns to pay to Owner upon default of Bidder any difference between the total amount of Bidder's Bid and the total amount of the Bid of the next lowest, responsible Bidder who submitted a responsive Bid as determined by Owner for the work required by the Contract Documents, provided that:

1.1. If there is no such next Bidder, and Owner does not abandon the Project, then Bidder and Surety shall pay to Owner the penal sum set forth on the face of this Bond, and

1.2. In no event shall Bidder's and Surety's obligation hereunder exceed the penal sum set forth on the face of this Bond.

2. Default of Bidder shall occur upon the failure of Bidder to deliver within the time required by the Bidding Documents (or any extension thereof agreed to in writing by Owner) the executed Agreement required by the Bidding Documents and any performance and payment bonds required by the Bidding Documents.

3. This obligation shall be null and void if:

3.1. Owner accepts Bidder's Bid and Bidder delivers within the time required by the Bidding Documents (or any extension thereof agreed to in writing by Owner) the executed Agreement required by the Bidding Documents and any performance and payment bonds required by the Bidding Documents, or

3.2. All Bids are rejected by Owner, or

3.3. Owner fails to issue a Notice of Award to Bidder within the time specified in the Bidding Documents (or any extension thereof agreed to in writing by Bidder and, if applicable, consented to by Surety when required by Paragraph 5 hereof).

4. Payment under this Bond will be due and payable upon default by Bidder and within 30 calendar days after receipt by Bidder and Surety of written notice of default from Owner, which notice will be given with reasonable promptness, identifying this Bond and the Project and including a statement of the amount due.

5. Surety waives notice of any and all defenses based on or arising out of any time extension to issue Notice of Award agreed to in writing by Owner and Bidder, provided that the total time for issuing Notice of Award including extensions shall not in the aggregate exceed 120 days from Bid due date without Surety's written consent.

6. No suit or action shall be commenced under this Bond prior to 30 calendar days after the notice of default required in Paragraph 4 above is received by Bidder and Surety and in no case later than one year after Bid due date.

7. Any suit or action under this Bond shall be commenced only in a court of competent jurisdiction located in the state in which the Project is located.

8. Notices required hereunder shall be in writing and sent to Bidder and Surety at their respective addresses shown on the face of this Bond. Such notices may be sent by personal delivery, commercial courier, or by United States Registered or Certified Mail, return receipt requested, postage pre-paid, and shall be deemed to be effective upon receipt by the party concerned.

9. Surety shall cause to be attached to this Bond a current and effective Power of Attorney evidencing the authority of the officer, agent, or representative who executed this Bond on behalf of Surety to execute, seal, and deliver such Bond and bind the Surety thereby.

10. This Bond is intended to conform to all applicable statutory requirements. Any applicable requirement of any applicable statute that has been omitted from this Bond shall be deemed to be included herein as if set forth at length. If any provision of this Bond conflicts with any applicable statute, then the provision of said statute shall govern and the remainder of this Bond that is not in conflict therewith shall continue in full force and effect.

11. The term "Bid" as used herein includes a Bid, offer, or proposal as applicable.

PERFORMANCE BOND

Any singular reference to Contractor, Surety, Owner, or other party shall be considered plural where applicable.

CONTRACTOR (Name and Address):

SURETY (Name and Address of Principal Place of Business):

OWNER (Name and Address):
TAYLOR COUNTY BOARD OF COUNTY COMMISSIONERS
108 NORTH JEFFERSON ST.
PERRY FL, 32347

CONTRACT
Date:
Amount:
Description (Name and Location): *Hodges Park - Pier Reconstruction, Taylor County, Florida.* The intent of this contract is to secure all labor, equipment and materials required for the Hodges Park - Pier Reconstruction project in Taylor County, Florida. This project includes complete removal and salvage/disposal of portions of the existing structure debris and new construction of a wooden piling pier as more fully detailed in the project plans and specifications.

BOND
Bond Number:
Date (Not earlier than Contract Date):
Amount:
Modifications to this Bond Form:

Surety and Contractor, intending to be legally bound hereby, subject to the terms printed on the reverse side hereof, do each cause this Performance Bond to be duly executed on its behalf by its authorized officer, agent, or representative.

CONTRACTOR AS PRINCIPAL
Company:

Signature: _____ (Seal)
Name and Title:

SURETY

_____ (Seal)
Surety's Name and Corporate Seal

By: _____
Signature and Title
(Attach Power of Attorney)

(Space is provided below for signatures of additional parties, if required.)

Attest: _____
Signature and Title

CONTRACTOR AS PRINCIPAL
Company:

Signature: _____ (Seal)
Name and Title:

SURETY

_____ (Seal)
Surety's Name and Corporate Seal

By: _____
Signature and Title
(Attach Power of Attorney)

Attest: _____
Signature and Title:

EJCDC No. C-610 (2002 Edition)

Originally prepared through the joint efforts of the Surety Association of America, Engineers Joint Contract Documents Committee, the Associated General Contractors of America, and the American Institute of Architects.

1. Contractor and Surety, jointly and severally, bind themselves, their heirs, executors, administrators, successors, and assigns to Owner for the performance of the Contract, which is incorporated herein by reference.

2. If Contractor performs the Contract, Surety and Contractor have no obligation under this Bond, except to participate in conferences as provided in Paragraph 3.1.

3. If there is no Owner Default, Surety's obligation under this Bond shall arise after:

3.1. Owner has notified Contractor and Surety, at the addresses described in Paragraph 10 below, that Owner is considering declaring a Contractor Default and has requested and attempted to arrange a conference with Contractor and Surety to be held not later than 15 days after receipt of such notice to discuss methods of performing the Contract. If Owner, Contractor and Surety agree, Contractor shall be allowed a reasonable time to perform the Contract, but such an agreement shall not waive Owner's right, if any, subsequently to declare a Contractor Default; and

3.2. Owner has declared a Contractor Default and formally terminated Contractor's right to complete the Contract. Such Contractor Default shall not be declared earlier than 20 days after Contractor and Surety have received notice as provided in Paragraph 3.1; and

3.3. Owner has agreed to pay the Balance of the Contract Price to:

1. Surety in accordance with the terms of the Contract;

2. Another contractor selected pursuant to Paragraph 4.3 to perform the Contract.

4. When Owner has satisfied the conditions of Paragraph 3, Surety shall promptly and at Surety's expense take one of the following actions:

4.1. Arrange for Contractor, with consent of Owner, to perform and complete the Contract; or

4.2. Undertake to perform and complete the Contract itself, through its agents or through independent contractors; or

4.3. Obtain bids or negotiated proposals from qualified contractors acceptable to Owner for a contract for performance and completion of the Contract, arrange for a contract to be prepared for execution by Owner and Contractor selected with Owner's concurrence, to be secured with performance and payment bonds executed by a qualified surety equivalent to the bonds issued on the Contract, and pay to Owner the amount of damages as described in Paragraph 6 in excess of the Balance of the Contract Price incurred by Owner resulting from Contractor Default; or

4.4. Waive its right to perform and complete, arrange for completion, or obtain a new contractor and with reasonable promptness under the circumstances:

1. After investigation, determine the amount for which it may be liable to Owner and, as soon as practicable after the amount is determined, tender payment therefor to Owner; or

2. Deny liability in whole or in part and notify Owner citing reasons therefor.

5. If Surety does not proceed as provided in Paragraph 4 with reasonable promptness, Surety shall be deemed to be in default on this Bond 15 days after receipt of an additional written notice from Owner to Surety demanding that Surety perform its obligations under this Bond, and Owner shall be entitled to enforce any remedy available to Owner. If Surety proceeds as provided in Paragraph 4.4, and Owner refuses the payment tendered or Surety has denied liability, in whole or in part, without further notice Owner shall be entitled to enforce any remedy available to Owner.

6. After Owner has terminated Contractor's right to complete the Contract, and if Surety elects to act under Paragraph 4.1, 4.2, or 4.3 above, then the responsibilities of Surety to Owner shall not be greater than those of Contractor under the Contract, and the responsibilities of Owner to Surety shall not be greater than those of Owner under the Contract. To a limit of the amount of this Bond, but subject to commitment by Owner of the Balance of the Contract Price to mitigation of costs and damages on the Contract, Surety is obligated without duplication for:

6.1. The responsibilities of Contractor for correction of defective Work and completion of the Contract;

6.2. Additional legal, design professional, and delay costs resulting from Contractor's Default, and resulting from the actions or failure to act of Surety under Paragraph 4; and

6.3. Liquidated damages, or if no liquidated damages are specified in the Contract, actual damages caused by delayed performance or non-performance of Contractor.

7. Surety shall not be liable to Owner or others for obligations of Contractor that are unrelated to the Contract, and the Balance of the Contract Price shall not be reduced or set off on account of any such unrelated obligations. No right of action shall accrue on this Bond to any person or entity other than Owner or its heirs, executors, administrators, or successors.

8. Surety hereby waives notice of any change, including changes of time, to Contract or to related subcontracts, purchase orders, and other obligations.

9. Any proceeding, legal or equitable, under this Bond may be instituted in any court of competent jurisdiction in the location in which the Work or part of the Work is located and shall be instituted within two years after Contractor Default or within two years after Contractor ceased working or within two years after Surety refuses or fails to perform its obligations under this Bond, whichever occurs first. If the provisions of this paragraph are void or prohibited by law, the minimum period of limitation available to sureties as a defense in the jurisdiction of the suit shall be applicable.

10. Notice to Surety, Owner, or Contractor shall be mailed or delivered to the address shown on the signature page.

11. When this Bond has been furnished to comply with a statutory requirement in the location where the Contract was to be performed, any provision in this Bond conflicting with said statutory requirement shall be deemed deleted herefrom and provisions conforming to such statutory requirement shall be deemed incorporated herein. The intent is that this Bond shall be construed as a statutory bond and not as a common law bond.

12. Definitions.

12.1 Balance of the Contract Price: The total amount payable by Owner to Contractor under the Contract after all proper adjustments have been made, including allowance to Contractor of any amounts received or to be received by Owner in settlement of insurance or other Claims for damages to which Contractor is entitled, reduced by all valid and proper payments made to or on behalf of Contractor under the Contract.

12.2. Contract: The agreement between Owner and Contractor identified on the signature page, including all Contract Documents and changes thereto.

12.3. Contractor Default: Failure of Contractor, which has neither been remedied nor waived, to perform or otherwise to comply with the terms of the Contract.

12.4. Owner Default: Failure of Owner, which has neither been remedied nor waived, to pay Contractor as required by the Contract or to perform and complete or comply with the other terms thereof.

FOR INFORMATION ONLY – Name, Address and Telephone
Surety Agency or Broker
Owner's Representative (engineer or other party)

PAYMENT BOND

Any singular reference to Contractor, Surety, Owner, or other party shall be considered plural where applicable.

CONTRACTOR (Name and Address):

SURETY (Name and Address of Principal Place of Business):

OWNER (Name and Address):
TAYLOR COUNTY BOARD OF COUNTY COMMISSIONERS
108 NORTH JEFFERSON ST.
PERRY FL, 32347

CONTRACT
Date:
Amount:
Description (Name and Location): *Hodges Park - Pier Reconstruction, Taylor County, Florida.* The intent of this contract is to secure all labor, equipment and materials required for the Hodges Park - Pier Reconstruction project in Taylor County, Florida. This project includes complete removal and salvage/disposal of portions of the existing structure debris and new construction of a wooden piling pier as more fully detailed in the project plans and specifications.

BOND
Bond Number:
Date (Not earlier than Contract Date):
Amount:
Modifications to this Bond Form:

Surety and Contractor, intending to be legally bound hereby, subject to the terms printed on the reverse side hereof, do each cause this Payment Bond to be duly executed on its behalf by its authorized officer, agent, or representative.

CONTRACTOR AS PRINCIPAL
Company:

Signature: _____ (Seal)
Name and Title:

SURETY

_____ (Seal)
Surety's Name and Corporate Seal

By: _____
Signature and Title
(Attach Power of Attorney)

(Space is provided below for signatures of additional parties, if required.)

Attest: _____
Signature and Title

CONTRACTOR AS PRINCIPAL
Company:

Signature: _____ (Seal)
Name and Title:

SURETY

_____ (Seal)
Surety's Name and Corporate Seal

By: _____
Signature and Title
(Attach Power of Attorney)

Attest: _____
Signature and Title:

EJCDC No. C-615 (2002 Edition)
Originally prepared through the joint efforts of the Surety Association of America, Engineers Joint Contract Documents Committee, the Associated General Contractors of America, the American Institute of Architects, the American Subcontractors Association, and the Associated Specialty Contractors.

1. Contractor and Surety, jointly and severally, bind themselves, their heirs, executors, administrators, successors, and assigns to Owner to pay for labor, materials, and equipment furnished by Claimants for use in the performance of the Contract, which is incorporated herein by reference.

2. With respect to Owner, this obligation shall be null and void if Contractor:

2.1. Promptly makes payment, directly or indirectly, for all sums due Claimants, and

2.2. Defends, indemnifies, and holds harmless Owner from all claims, demands, liens, or suits alleging non-payment by Contractor by any person or entity who furnished labor, materials, or equipment for use in the performance of the Contract, provided Owner has promptly notified Contractor and Surety (at the addresses described in Paragraph 12) of any claims, demands, liens, or suits and tendered defense of such claims, demands, liens, or suits to Contractor and Surety, and provided there is no Owner Default.

3. With respect to Claimants, this obligation shall be null and void if Contractor promptly makes payment, directly or indirectly, for all sums due.

4. Surety shall have no obligation to Claimants under this Bond until:

4.1. Claimants who are employed by or have a direct contract with Contractor have given notice to Surety (at the addresses described in Paragraph 12) and sent a copy, or notice thereof, to Owner, stating that a claim is being made under this Bond and, with substantial accuracy, the amount of the claim.

4.2. Claimants who do not have a direct contract with Contractor:

1. Have furnished written notice to Contractor and sent a copy, or notice thereof, to Owner, within 90 days after having last performed labor or last furnished materials or equipment included in the claim stating, with substantial accuracy, the amount of the claim and the name of the party to whom the materials or equipment were furnished or supplied, or for whom the labor was done or performed; and

2. Have either received a rejection in whole or in part from Contractor, or not received within 30 days of furnishing the above notice any communication from Contractor by which Contractor had indicated the claim will be paid directly or indirectly; and

3. Not having been paid within the above 30 days, have sent a written notice to Surety and sent a copy, or notice thereof, to Owner, stating that a claim is being made under this Bond and enclosing a copy of the previous written notice furnished to Contractor.

5. If a notice by a Claimant required by Paragraph 4 is provided by Owner to Contractor or to Surety, that is sufficient compliance.

6. When a Claimant has satisfied the conditions of Paragraph 4, the Surety shall promptly and at Surety's expense take the following actions:

6.1. Send an answer to that Claimant, with a copy to Owner, within 45 days after receipt of the claim, stating the amounts that are undisputed and the basis for challenging any amounts that are disputed.

6.2. Pay or arrange for payment of any undisputed amounts.

7. Surety's total obligation shall not exceed the amount of this Bond, and the amount of this Bond shall be credited for any payments made in good faith by Surety.

8. Amounts owed by Owner to Contractor under the Contract shall be used for the performance of the Contract and to satisfy claims, if any, under any performance bond. By Contractor furnishing and Owner accepting this Bond, they agree that all funds earned by Contractor in the performance of the Contract are dedicated to satisfy obligations of Contractor and Surety under this Bond, subject to Owner's priority to use the funds for the completion of the Work.

9. Surety shall not be liable to Owner, Claimants, or others for obligations of Contractor that are unrelated to the Contract. Owner shall not be liable for payment of any costs or expenses of any Claimant under this Bond, and shall have under this Bond no obligations to make payments to, give notices on behalf of, or otherwise have obligations to Claimants under this Bond.

10. Surety hereby waives notice of any change, including changes of time, to the Contract or to related Subcontracts, purchase orders and other obligations.

11. No suit or action shall be commenced by a Claimant under this Bond other than in a court of competent jurisdiction in the location in which the Work or part of the Work is located or after the expiration of one year from the date (1) on which the Claimant gave the notice required by Paragraph 4.1 or Paragraph 4.2.3, or (2) on which the last labor or service was performed by anyone or the last materials or equipment were furnished by anyone under the Construction Contract, whichever of (1) or (2) first occurs. If the provisions of this paragraph are void or prohibited by law, the minimum period of limitation available to sureties as a defense in the jurisdiction of the suit shall be applicable.

12. Notice to Surety, Owner, or Contractor shall be mailed or delivered to the addresses shown on the signature page. Actual receipt of notice by Surety, Owner, or Contractor, however accomplished, shall be sufficient compliance as of the date received at the address shown on the signature page.

13. When this Bond has been furnished to comply with a statutory requirement in the location where the Contract was to be performed, any provision in this Bond conflicting with said statutory requirement shall be deemed deleted herefrom and provisions conforming to such statutory requirement shall be deemed incorporated herein. The intent is that this Bond shall be construed as a statutory Bond and not as a common law bond.

14. Upon request of any person or entity appearing to be a potential beneficiary of this Bond, Contractor shall promptly furnish a copy of this Bond or shall permit a copy to be made.

15. DEFINITIONS

15.1. Claimant: An individual or entity having a direct contract with Contractor, or with a first-tier subcontractor of Contractor, to furnish labor, materials, or equipment for use in the performance of the Contract. The intent of this Bond shall be to include without limitation in the terms "labor, materials or equipment" that part of water, gas, power, light, heat, oil, gasoline, telephone service, or rental equipment used in the Contract, architectural and engineering services required for performance of the Work of Contractor and Contractor's Subcontractors, and all other items for which a mechanic's lien may be asserted in the jurisdiction where the labor, materials, or equipment were furnished.

15.2. Contract: The agreement between Owner and Contractor identified on the signature page, including all Contract Documents and changes thereto.

15.3. Owner Default: Failure of Owner, which has neither been remedied nor waived, to pay Contractor as required by the Contract or to perform and complete or comply with the other terms thereof.

FOR INFORMATION ONLY – Name, Address and Telephone
Surety Agency or Broker:
Owner's Representative (engineer or other party):

PART 3 – CONDITIONS OF THE CONTRACT

This document has important legal consequences; consultation with an attorney is encouraged with respect to its use or modification. This document should be adapted to the particular circumstances of the contemplated Project and the Controlling Law.

STANDARD GENERAL CONDITIONS OF THE CONSTRUCTION CONTRACT

Prepared by

ENGINEERS JOINT CONTRACT DOCUMENTS COMMITTEE

and

Issued and Published Jointly By

PROFESSIONAL ENGINEERS IN PRIVATE PRACTICE
a practice division of the
NATIONAL SOCIETY OF PROFESSIONAL ENGINEERS

AMERICAN COUNCIL OF ENGINEERING COMPANIES

AMERICAN SOCIETY OF CIVIL ENGINEERS

This document has been approved and endorsed by

The Associated General Contractors of America

Construction Specifications Institute

Copyright © 2002 National Society of Professional Engineers for EJCDC. All rights reserved.

This Document may be reviewed in its entirety online at:
http://www.taylorcountygov.com/eng/documents/C-700_000.pdf

Copyright ©2002

National Society of Professional Engineers
1420 King Street, Alexandria, VA 22314

American Council of Engineering Companies
1015 15th Street, N.W., Washington, DC 20005

American Society of Civil Engineers
1801 Alexander Bell Drive, Reston, VA 20191-4400

These General Conditions have been prepared for use with the Suggested Forms of Agreement Between Owner and Contractor Nos. C-520 or C-525 (2002 Editions). Their provisions are interrelated and a change in one may necessitate a change in the other. Comments concerning their usage are contained in the EJCDC Construction Documents, General and Instructions (No. C-001) (2002 Edition). For guidance in the preparation of Supplementary Conditions, see Guide to the Preparation of Supplementary Conditions (No. C-800) (2002 Edition).

Copyright © 2002 National Society of Professional Engineers for EJCDC. All rights reserved.

Supplementary Conditions

These Supplementary Conditions amend or supplement the Standard General Conditions of the Construction Contract (No. C-700, 2002 Edition) and other provisions of the Contract Documents as indicated below. All provisions which are not so amended or supplemented remain in full force and effect.

The terms used in these Supplementary Conditions have the meanings stated in the General Conditions. Additional terms used in these Supplementary Conditions have the meanings stated below, which are applicable to both the singular and plural thereof.

SC-2.02 Delete Paragraph 2.02.A in its entirety and insert the following:

A. Owner shall furnish to Contractor up to three printed or hard copies of the Drawings and Project Manual. Additional copies will be furnished upon request at the cost of reproduction.

SC-4.06 Delete Paragraphs 4.06.A and 4.06.B in their entirety and insert the following:

A. No reports on drawings related to Hazardous Environmental Conditions are known to Owner or Engineer.

B. Not Used.

SC-5.04 Add the following new paragraph immediately after Paragraph 5.04.B:

C. The limits of liability for the insurance required by Paragraph 5.04 of the General Conditions shall provide coverage for not less than the following amounts or greater where required by Laws and Regulations:

1. Workers' Compensation, and related coverages under Paragraphs 5.04.A.1 and A.2 of the General Conditions:

a.	*State*	*Statutory*
b.	*Applicable Federal (e.g., Longshoreman's)*	*Statutory*
c.	*Employer's Liability*	*$100,000*

2. Contractor's General Liability under Paragraphs 5.04.A.3 through A.6 of the General Conditions which shall include completed operations and product liability coverages and eliminate the exclusion with respect to property under the care, custody and control of Contractor:

a.	*General Aggregate*	*$1,000,000*
b.	*Products – Completed Operations Aggregate*	*$1,000,000*
c.	*Personal and Advertising Injury*	*$1,000,000*
d.	*Each Occurrence (Bodily Injury and Property Damage)*	*$1,000,000*
e.	*Property Damage liability insurance will provide Explosion, Collapse, and Underground coverages where applicable.*	
f.	*Excess or Umbrella Liability*	
	1) General Aggregate	*$1,000,000*
	2) Each Occurrence	*$1,000,000*

3. Automobile Liability under Paragraph 5.04.A.6 of the General Conditions:

a.	*Bodily Injury:*	
	1) Each person	*$1,000,000*
	2) Each Accident	*$1,000,000*
b.	*Property Damage:*	
	1) Each Accident	*$ 500,000*
c.	*Combined Single Limit of*	*$1,000,000*

4. The Contractual Liability coverage required by Paragraph 5.04.B.4 of the General Conditions shall provide coverage for not less than the following amounts:

a.	*Bodily Injury:*	
	1) Each Accident	*$1,000,000*
	2) Annual Aggregate	*$1,000,000*
b.	*Property Damage:*	
	1) Each Accident	*$1,000,000*
	2) Annual Aggregate	*$1,000,000*

5.04.B.1. Additional Insureds:

Taylor County Board of County Commissioners

SC-6.06 Add a new paragraph immediately after Paragraph 6.06.G:

H. The Contractor shall not award work valued at more than fifty (50%) percent of the Contract Price to Subcontractor(s), without prior written approval of the Owner.

SC-6.10 Add a new paragraph immediately after Paragraph 6.10.A:

B. Owner is exempt from payment of sales and compensating use taxes of the State of Florida and of cities and counties thereof on all materials to be incorporated into the Work which are Direct Purchased by Owner.

1. Owner will furnish the required certificates of tax exemption to Contractor for use in the purchase of Direct Purchased supplies and materials to be incorporated into the Work.

2. Owner's exemption does not apply to supplies, materials, or construction tools, machinery, equipment, or other property purchased by or leased by Contractor, or to supplies or materials not incorporated into the Work.

SC-6.13

Any and All Permits secured from the County, City, Florida Department of Transportation, Florida Department of Health, Suwannee River Water Management District, Army Corp of Engineers or the Florida Department of Environmental Protection and specific requirements shall be strictly adhered to, including all requirements for the protection of wetlands and Manatees, if applicable.

SC-9.03.A. Add the following language at the end of paragraph 9.03.A:

1. *The County will provide Project Representative services for this project. All work performed for this project shall be inspected by an authorized representative of the Board of County Commissioners of Taylor County on a five day, 8:00 a.m. ~ 5:00 p.m., Monday through Friday work week, excluding County-designated holidays. If weekend work becomes necessary, it must be authorized by the County's representative at least three days prior to scheduling of such work.*

   a. *The authorized representative shall be given no less than 24 hours prior notice of the expected time and date of pertinent aspects of this project to include, but not be limited to, piling installation, material deliveries, etc.*

   b. *The following individuals, in the listed order, will be the responsible agent(s) for the County:*

      Ted Lakey, County Administrator
      Hank Evans, Public Works Director
      Kenneth Dudley, County Engineer
      Victor Blanco, University of Florida Marine and Natural Resources Agent

SC-14.02.A.3 Add the following language at the end of paragraph 14.02.A.3:

No payments will be made that would deplete the retainage, place in escrow any funds that are required for retainage, or invest the retainage for the benefit of the Contractor.

SC-14.02.C.1. Delete Paragraph 14.02.C.1 in its entirety and insert the following in its place:

1. *The Application for Payment with Engineer's recommendations will be presented to the County for consideration. If the County finds the Application for Payment acceptable, the recommended amount less any reduction under the provisions of Paragraph 14.02.D will become due thirty days after the Application for Payment is presented to the County, and the County will make payment to the Contractor.*

SC-16

The venue for all disputes shall be Taylor County, Florida.

PART 4 – SPECIFICATIONS

SUPPLEMENTAL SPECIFICATIONS

1. The Taylor County Board of County Commissioners is undertaking construction of Hodges Park - Pier Reconstruction. The intent of this contract is to secure all labor, equipment and materials required for the Hodges Park - Pier Reconstruction project in Taylor County, Florida. This project includes complete removal and salvage/disposal of portions of the existing structure debris and new construction of a wooden piling pier and covered pavilion as more fully detailed in the project plans and specifications. All work shall be completed in accordance with these specifications and plans.

2. FDOT MODIFICATIONS - When "FDOT Roadway and Traffic Design Standards" or "FDOT Standard Specifications for Road and Bridge Construction" refers to FDOT, Engineer, Department, Inspector, these items shall refer to Taylor County Engineer or authorized representative. When "FDOT Roadway and Traffic Design Standards" or "FDOT Standard Specifications for Road and Bridge Construction" refers to Laboratory this item refers to an independent properly licensed testing lab selected by Contractor with approval of County and fully compensated by Contractor.

3. FDOT SPECIFICATIONS – When the specifications refer to the State of Florida or officials of the State it shall be interpreted as the County Commissioners or their authorized representative.

4. WARRANTY - The Correction Period specified in Paragraph 13.07 of the General Conditions is modified to require that all workmanship and materials furnished to complete this project shall be warranted for no less than a one-year period after the date of final acceptance.

5. All products and materials used shall meet all stated requirements and specifications. Proof of product/supplies compliance shall be forwarded and approved prior to covering work and prior to acceptance for payment.

6. At a minimum, Contractor shall make provisions to accommodate one (1) authorized Taylor County representative to be on site during all piling placement/installation.

7. All product/material certifications shall be provided to Taylor County at time of material receipt.

8. Contractor shall retain and post in a visible area to workers, Manatee "Caution Sign" on any and all construction vessels while traversing/working in the canal on this project. Idle speed is required if operating a vessel in the construction area. Sign is available at: http://myfwc.com/media/415118/Manatee_CautionShutDown.pdf

   All equipment must be shutdown if a manatee comes within 50 feet of the operation. A collision with and/or injury to a manatee shall be reported immediately to the Florida Fish and Wildlife Conservation Commission at 1-888-404-FWCC (3922) and the U.S. Fish and Wildlife Service at (1-904-232-2580) for North Florida or (1-561-562-3909) for South Florida.

SECTION 01100 – SUMMARY OF THE WORK

PART 1 - GENERAL

1.1 RELATED DOCUMENTS

A. Drawings and general provisions of the Contract, including General and Supplementary Conditions and Division 1 Specification Sections, apply to this Section.

1.2 WORK COVERED BY CONTRACT DOCUMENTS

A. Project Identification: Project consists of the Hodges Park - Pier Reconstruction.

1. Project Location: Hodges Park, 21275 Keaton Beach Dr., Keaton Beach, Taylor County, Florida 32348.

2. Hodges Park - Pier Reconstruction Contract: The intent of this contract is to secure all labor, equipment and materials required for the Hodges Park - Pier Reconstruction project in Taylor County, Florida. The intent of this contract is to secure all labor, equipment and materials required for the Hodges Park - Pier Reconstruction project in Taylor County, Florida. This project includes complete removal and salvage/disposal of portions of the existing structure debris and new construction of a wooden piling pier and pavilion as more fully detailed in the project plans and specifications.

   a. Some work requires replacing existing piling supports and bracing and further coordinating connection with portions of the existing structure. Contractor shall become fully aware of any such requirements and associated materials/labor to accomplish such.

   b. See Demolition 02050 for additional details concerning salvageable materials.

3. The Sequence of Construction will be permitted to follow the Contractor's typical format for such work. However, the Sequence of Construction is generally expected to initiate with placement of Erosion Control measures, removal of existing structure debris, piling installations, structure construction, final inspection.

B. Architect/Engineer Identification: The Contract Documents, dated March, 2017, were prepared and assembled for the project by the Taylor County Engineering Department. Kenneth Dudley, P.E. is the Engineer of Record.

C. The Contractor shall furnish all labor, tools, services and incidentals to complete all work required by these Contract Documents.

D. The Contractor shall perform the work complete, in place, disinfected where applicable and ready for continuous service, and shall include repairs, replacements and restoration required as a result of damages caused during this construction.

E. Furnish and install all materials, equipment and labor which is reasonably and properly inferable and necessary for the proper construction of the work, whether specifically indicated in the Contract Documents or not.

1.3 CONTRACT(S)

A. Project will be constructed under a general construction contract.

1.4 SUBSTANTIAL COMPLETION

A. The project will be considered substantially complete when all components of the project are complete, in operation and available for use by Owner.

1.5 WORK SEQUENCE

A. The Work shall be conducted (if applicable in multiple phases), as described on phasing drawings.

B. All work performed under this contract shall be inspected by an authorized representative of the Board of County Commissioners of Taylor County on a five day, 8:00 a.m. ~ 5:00 p.m., Monday through Friday work week, excluding County-designated holidays. If weekend work becomes necessary, Contractor shall obtain written approval at least three days prior to scheduling of such work.

C. The County's authorized representative shall be given no less than 48 hours prior notice of the expected time and date of pertinent aspects of this project to include, but not be limited to, piling installation, concrete pours, material deliveries, lane closures etc.

D. The Contractor shall post all needed warning signs for construction.

1.6 OWNER FURNISHED PRODUCTS

A. None.

1.7 ABBREVIATIONS AND REFERENCES

A. Whenever reference is made to the furnishing of materials or testing thereof to conform to the standards of any technical society, organization or body, it shall be construed to mean the latest standard, code, specification or tentative specification adopted and published at the date of advertisement for bids, even though reference has been made to an earlier standard. The following list of specifications is hereby made a part of the Contract the same as if herein repeated in full. In the event of any conflict between any of these specifications, the latter shall govern. In the event that one of the following conflicts with another, the decision as to which shall govern will be decided by the Engineer, whose judgment will be final.

B. Reference to a technical society, organization, or body may be in the Specifications by abbreviations, in accordance with the following list:

AASHTO	- The American Association of State Highway and Transportation Officials
ACI	- American Concrete Institute
AGA	- American Gas Association
AGMA	- American Gear Manufacturers Association
IEEE	- Institute of Electrical and Electronic Engineers
AISC	- American Institute of Steel Construction
AISI	- American Iron and Steel Institute
ANSI	- American National Standards Institute
API	- American Petroleum Institute
ASCE	- American Society of Civil Engineers
ASME	- American Society of Mechanical Engineers
ASTM	- American Society of Testing Materials
AWPA	- American Wood Preservation Association
AWS	- American Welding Society
AWWA	- American Water Works Association
FED SPEC	- Federal Specifications
CIPRA	- Cast Iron Pipe Research Association
DIPRA	- Ductile Iron Pipe Research Association
NCPI	- National Clay Pipe Institute
NEMA	- National Electrical Manufacturers Association
NFPA	- National Fire Protection Association
NEWWA	- New England Water Works Association
TCA	- Tile Council of America, Inc.
NEC	- National Electric Code
NLMA	- National Lumber Manufacturers Association
SAE	- Society of Automotive Engineers Standards
SHBI	- Steel Heating Boiler Institute
SBCC	- Standard Building Code Congress International, Inc.
FDOT/DOT	- Florida Department of Transportation
U.L., Inc.	- Underwriter's Laboratories, Inc.
OSHA	- Occupation Health and Safety Act
SSPC	- Steel Structures Painting Council

C. When no reference is made to a code, standard, or specification, the standard specification of the AWWA, the ASTM, the ANSI, the IEEE, the FDOT or the NEMA shall govern.

PART 2 - PRODUCTS (Not Used)

PART 3 - EXECUTION (Not Used)

END OF SECTION 01100

SECTION 01600 – MATERIAL AND EQUIPMENT

PART 1 - GENERAL

1.1 RELATED DOCUMENTS

A. Drawings and general provisions of the Contract, including General and Supplementary conditions and other Division 1 Specification Sections, apply to this Section.

1.2 SUMMARY

A. This Section includes administrative and procedural requirements governing the Contractor's selection of products for use in the Project.

B. Related Sections: The following Sections contain requirements that relate to this Section:

1. Division 1 Section "Reference Standards and Definitions" specifies the applicability of industry standards to products specified.

2. Division 1 Section "Submittals" specifies requirements for submittal of the Contractor's Construction Schedule and the Submittal Schedule.

1.3 DEFINITIONS

A. Definitions used in this Article are not intended to change the meaning of other terms used in the Contract Documents, such as "specialties," "systems," "structure," "finishes," "accessories," and similar terms. Such terms are self-explanatory and have well-recognized meanings in the construction industry.

1. "Products" are items purchased for incorporation in the Work, whether purchased for the Project or taken from previously purchased stock. The term "product" includes the terms "material," "equipment," "system," and terms of similar intent.

2. "Named Products" are items identified by the manufacturer's product name, including make or model number or other designation, shown or listed in the manufacturer's published product literature that is current as of the date of the Contract Documents.

3. "Foreign Products," as distinguished from "domestic products," are items substantially manufactured (50 percent or more of value) outside the United States and its possessions. Products produced or supplied by entities substantially owned (more than 50 percent) by persons who are not citizens of, nor living within, the United States and its possessions are also considered to be foreign products.

4. "Materials" are products substantially shaped, cut, worked, mixed, finished, refined or otherwise fabricated, processed, or installed to form a part of the Work.

5. "Equipment" is a product with operational parts, whether motorized or manually operated, that requires service connections, such as wiring or piping.

6. Basis-of-Design Product Specification: Where a specific manufacturer's product is named and accompanied by the words "basis of design," including make or model or other designation, to establish the significant qualities related to type, function, dimension, in-service performance, physical properties, appearance, and other characteristics for purposes of evaluating comparable products of other named manufacturers.

7. Manufacturer's Warranty: Prepared written warranty published by individual manufacturer for a particular product and specifically endorsed by Manufacturer to Owner.

8. Special Warranty: Written warranty required by or incorporated into the Contract Documents, whether to extend time limit provided by manufacturer's warranty or to provide more rights to owner.

1.4 SUBSTITUTIONS

A. Requests for changes in products, materials, equipment, and methods of construction required by Contract Documents proposed by the Contractor after award of the Contract are considered requests for "substitutions." The following are not considered substitutions:

1. Substitutions requested by Bidders during the bidding period, and accepted prior to award of Contract, are considered as included in the Contract Documents and are not subject to requirements specified in this Section for substitutions.

2. Revisions to Contract Documents requested by the Owner or Architect/Engineer.

3. Specified options of products and construction methods included in Contract Documents.

4. Contractor's determination of and compliance with governing regulations and orders issued by governing authorities.

1.5 SUBMITTALS

A. Substitution Request Submittal: Requests for substitution will be considered if received within 30 days after commencement of the Work. Requests received more than 30 days after commencement of the Work may be considered or rejected at the discretion of the Owner and Architect/Engineer.

1. Submit 3 copies of each request for substitution for consideration. Submit requests in the form and in accordance with procedures required for Change Order proposals.

2. Identify the product, or the fabrication or installation method to be replaced in each request. Include related Specification Section and Drawing numbers.

3. Provide complete documentation showing compliance with the requirements for substitutions, and the following information, as appropriate:

a. Coordination information, including a list of changes or modifications needed to other parts of the Work and to construction performed by the Owner and separate Contractors that will become necessary to accommodate the proposed substitution.

b. A detailed comparison of significant qualities of the proposed substitution with those of the Work specified. Significant qualities may include elements such as size, weight, durability, performance and visual effect.

c. Product Data, including Drawings and descriptions of products, fabrication and installation procedures.

d. Samples, where applicable or requested.

e. A statement indicating the substitution's effect on the Contractor's Construction Schedule compared to the schedule without approval of the substitution. Indicate the effect of the proposed substitution on overall Contract Time.

f. Cost information, including a proposal of the net change, if any in the Contract Sum.

g. The Contractor's certification that the proposed is equal-to or better in every respect to that required by the Contract Documents and is appropriate for the applications indicated.

h. The Contractor's waiver of rights to additional payment or time that may subsequently become necessary because of the failure of the substitution to perform adequately.

4. ARCHITECT'S/ENGINEER'S ACTION

a. Within one week of receipt of the request for substitution, the Architect/Engineer will request additional information or documentation necessary for evaluation of the request.

b. Within two weeks of receipt of the request, or one week of receipt of the additional information or documentation, which ever is later, the Architect/Engineer will notify the Contractor of acceptance or rejection of the proposed substitution. If a decision on use of a proposed substitute cannot be made or obtained within the time allocated, use the product specified by name. Acceptance will be in the form of a Change Order.

1.6 QUALITY ASSURANCE

A. Source Limitations: To the fullest extent possible, provide products of the same kind from a single source.

B. Compatibility of Options: When the Contractor is given the option of selecting between 2 or more products or manufacturers for use on the Project, the product selected shall be compatible with products previously selected, even if previously selected products were also options.

1. Each prime contractor is responsible for providing products and construction methods that are compatible with products and construction methods of other prime or separate contractors.

2. If a dispute arises between prime contractors over concurrently selectable, but incompatible products, the Architect will determine which products shall be retained and which are incompatible and must be replaced.

C. Nameplates: Except for required labels and operating data, do not attach or imprint manufacturer's or producer's nameplates or trademarks on exposed surfaces of products that will be exposed to view in occupied spaces or on the exterior.

1. Labels: Locate required product labels and stamps on concealed surfaces or, where required for observation after installation, on accessible surfaces that are not conspicuous.

2. Equipment Nameplates: Provide a permanent nameplate on each item of service-connected or power-operated equipment. Locate on an easily accessible surface that is inconspicuous in occupied spaces. The nameplate shall contain the following information and other essential operating data:

a. Name of product and manufacturer
b. Model and serial number
c. Capacity
d. Speed
e. Ratings

1.7 PRODUCT DELIVERY, STORAGE, AND HANDLING

A. Deliver, store, and handle products according to the manufacturer's recommendations, using means and methods that will prevent damage, and loss, including theft.

1. Coordinate delivery with installation time to assure minimum holding time for items that are flammable, hazardous, easily damages, or sensitive to deterioration, theft, and other losses; and to prevent overcrowding of construction spaces.

2. Deliver products to the site in undamaged condition in the manufacturer's original sealed container or other packaging system, complete with labels and instructions for handling, storing, and unpacking, protecting, and installing.

3. Inspect products upon delivery to ensure compliance with the Contract Documents and to ensure that products are undamaged and properly protected.

4. Store products at the site in a manner that will facilitate inspection and measurement of quantity or counting of units.

5. Store heavy materials away from the Project structures in a manner that will not endanger the supporting construction.

6. Store products subject to damage by the elements above ground, under cover in a weather tight enclosure, with ventilation adequate to prevent condensation. Maintain temperature and humidity within range required by manufacturer's instructions.

B. All new installed materials shall be sealed from moisture penetration at the end of each day.

PART 2 - PRODUCTS

2.1 PRODUCT SELECTION

A. General Product Requirements: Provide products that comply with the Contract Documents, that are undamaged and, unless otherwise indicated, new at the time of installation. Discontinued items will not be accepted.

1. Provide products complete with accessories, trim, finish, safety guards, and other devices and details needed for a complete installation and the intended use and effect.

2. Standard Products: Where available, provide standard products of types that have been produced and used successfully in similar situations on other projects.

B. Product Selection Procedures: The Contract Documents and governing regulations govern product selection. Procedures governing product selection include the following:

1. Proprietary Specification Requirements: Where specifications name only a single product or manufacturer, provide the product indicated. No substitutions will be permitted.

2. Semiproprietary Specification Requirements: Where Specifications name two or more products or manufacturers, provide one of the products indicated. No substitutions will be permitted.

a. Where Specifications specify products or manufacturers by name, accompanied by the term "**or equal**" or "**or approved equal**," comply with the Contract Documents provisions concerning "substitutions" to obtain approval for use of an unnamed product.

3. Nonproprietary Specifications: When Specifications list products or manufacturers that are available and may be incorporated in the Work, but do not restrict the Contractor to use of these products only, the Contractor may propose any available product that complies with Contract requirements. Comply with Contract Document provisions concerning "substitutions" to obtain approval for use of an unnamed product or manufacturer.

4. Descriptive Specification Requirements: Where Specifications describe a product or assembly, listing exact characteristics required, with or without use of a brand or trade name, provide a product or assembly that provides the characteristics and otherwise complies with Contract requirements.

5. Performance Specification Requirements: Where Specifications require compliance with performance requirements only, and do not provide a list of acceptable products and/or

manufacturers, provide products that comply with these requirements and are recommended by the manufacturer for the application indicated.

a. Manufacturer's recommendations may be contained in published product literature or by the manufacturer's certification of performance.

6. Compliance with Standards, Codes, and Regulations: Where Specifications only require compliance with an imposed code, standard, or regulation, select a product that complies with the standards, codes, or regulations specified.

7. Visual Matching: Where Specifications require matching an established Sample (match existing), the Architect's/Engineer's decision will be final on whether a proposed product matches satisfactorily.

a. Where no product available within the specified category matches satisfactorily and complies with other specified requirements, comply with provisions of the Contract Documents concerning "substitutions" for selection of a matching product in another product category.

8. Visual Selection: Where specified product requirements include the phrase "…as selected from manufacturer's standard colors, patterns, textures…" or a similar phrase, select a product and manufacturer that complies with specified requirements. The Architect/Engineer will select the color, pattern, and texture from the full available product line of that manufacturer with final approval from Owner. Any selections within the product line which are unavailable, no longer made or superseded by another should be so marked. The use of the word "standard" in this context is defined as all colors offered by a manufacturer in their published literature and would not include the creation of a specially mixed color for this specific project not typically available.

2.2 PRODUCT SUBSTITUTIONS

A. Conditions: Contractor's substitution request will be received and considered by the Architect/Engineer when one or more of the following conditions are satisfied, as determined by the Architect/Engineer; otherwise requests will be returned without action except to record noncompliance with these requirements.

1. Extensive revisions to Contract Documents are not required.

2. Proposed changes are in keeping with the general intent of Contract Documents.

3. The request is timely, fully documented and properly submitted.

4. The request is directly related to an "or approved equal" clause or similar language in the Contract Documents.

5. The specified product or method of construction cannot be provided within the Contract Time. The request will not be considered if the product or method cannot be provided as a result of failure to pursue the Work promptly or coordinate activities properly.

6. A substantial advantage is offered the Owner, in terms of cost, time, energy conservation or other considerations of merit, after deducting offsetting responsibilities the Owner may be required to bear. Additional responsibilities for the Owner may include additional compensation to the Architect/Engineer for redesign and evaluation services, increased cost of other construction by the Owner or separate contractors, and similar considerations.

7. The specified product or method of construction cannot receive necessary approval by a governing authority, and the requested substitution can be approved.

8. The specified product or method of construction cannot be provided in a manner that is compatible with other materials, and where the Contractor certifies that the substitution will overcome the incompatibility.

9. The specified product or method of construction cannot be coordinated with other materials, and where the Contractor certifies that the proposed substitution can be coordinated.

10. The specified product or method of construction cannot provide a warranty required by the Contract Documents and where the Contractor certifies that the proposed substitution provides the required warranty.

B. The Contractor's submittal and Architect's/Engineer's acceptance of Shop Drawings, Product Data or Samples that relate to construction activities not complying with the Contract Documents does not constitute an acceptable or valid request for substitution, nor does it constitute approval.

PART 3 - EXECUTION

3.1 INSTALLATION OF PRODUCTS

A. Comply with manufacturer's instructions and recommendations for installation of products in the applications indicated. Anchor each product securely in place, accurately located and aligned with other Work.

B. Clean exposed surfaces and protect as necessary to ensure freedom from damage and deterioration at time of Substantial Completion.

END OF SECTION 01600

SECTION 01720 –PROJECT RECORD DOCUMENTS

PART 1 - GENERAL

1.1 REQUIREMENTS INCLUDED

A. Maintain a complete and accurate log of control and survey work on site as work progresses.

B. Throughout the Project duration maintain, on site, one set of the following record documents; record actual revisions to the work:

1. Contract Drawings
2. Electronic AutoCAD drawing files for Contract Drawing and Shop Drawings
3. Project Specifications
4. Addenda
5. Change Orders and other modifications to the Contract Drawings
6. Reviewed and approved shop drawings, product data, and samples
7. Written interpretations and clarifications
8. Field orders or written directives or instructions
9. Field test reports
10. Construction photographs

1.2 RELATED REQUIREMENTS

A. Section 01050: Field Engineering.

B. Section 01340: Shop Drawings, Working Drawings and Samples.

C. Section 01380: Construction Photographs.

1.3 MAINTENANCE OF DOCUMENTS AND SAMPLES

A. Store documents and samples in Contractor's field office apart from documents used for construction.

1. Provide files and racks for storage of documents.

2. Provide locked cabinet or secure storage space for storage samples.

B. File documents and samples in accordance with CSI/CSC format.

C. Maintain documents in a clean, dry, legible condition and in good condition and in good order. Do not use record documents for construction purposes.

D. Make documents and samples available at all times for inspection by the Architect/Engineer.

E. As a prerequisite for monthly progress payments, the Contractor is to exhibit the currently updated "record documents" for review by the Architect/Engineer and Owner.

1.4 MARKING DEVICES

A. Provide felt tip marking pens for recording information in the color code designated (RED) by the Architect/Engineer.

1.5 RECORDING

A. Label each document "PROJECT RECORD" in neat large printed letters.

B. Record information concurrently with construction progress.

1. Do not conceal any work until required information is recorded.

C. Drawings: Legibly mark to record actual consideration:

1. Depth of various elements of foundation in relation to finish first floor datum

2. Field changes of dimension and detail

3. Changes made by Field Order or by Change Order

4. Details not on original contract drawings

5. Major architectural and structural changes including relocation of doors, windows, etc.

6. Prior to contract closeout, this data shall be recorded to scale legibly on a clean contract set of documents. Where changes are to be recorded, the contract set drawings will be labeled and marked "As-Builts." Where the work was installed exactly as shown on the contract drawings the drawings shall not be disturbed other than being marked "As-Built." In showing the changes the same legend shall be used to identify stormwater structure, piping etc., as was used on the contract drawings. The Contractor shall review and sign the approved As-Built drawings and ascertain that all data furnished on the drawings are accurate and truly represent the work as actually installed. The drawings including those unchanged and changed shall be submitted to the Architect/Engineer when completed, together with two sets of "As-Built" prints and an electronic pdf format copy burned to a CD for review and forwarding to the Owner.

D. Specifications and Addenda: Legibly mark each Section to record:

1. Manufacturer, trade name, catalog number, and Supplier of each Product and items of equipment actually installed.

2. Changes made by Field Order or by Change Order.

1.6 SUBMITTAL

A. At Contract close-out, deliver Record Documents to the Engineer for the Owner.

B. Accompany submittal with transmittal letter in duplicate, containing:

1. Date
2. Project title and number
3. Contractor's name and address
4. Title and number of each Record Document
5. Signature of Contractor or his authorized representative

PART 2 - PRODUCTS (Not Used)

PART 3 - EXECUTION (Not Used)

END OF SECTION 01720

SECTION 02010 - STORM WATER POLLUTION PREVENTION PLAN

Project:
Hodges Park - Pier Reconstruction
Taylor County, Florida

Owner:
Taylor County Board of County Commissioners
201 East Green Street
Perry, Florida 32347

Table of Contents

I.	Site Description	2
II.	General Conditions	2
III.	Controls	3
IV.	Other Controls	4
V.	Compliance with Federal, State and Local Regulations	5
VI.	Maintenance Inspection Procedures	5
VII.	Spill Prevention Control and Countermeasures (SPCC) Plan	6
VIII.	Owner Certification	8
IX.	Contractor Certification	8
X.	Inspection and Maintenance Report Form	10

Notice of Intent (NOI) Form (http://www.dep.state.fl.us/water/stormwater/npdes/forms/62-621.300_4b.pdf)

Notice of Termination (NOT) Form (http://www.dep.state.fl.us/water/stormwater/npdes/forms/62-621.300_6.pdf)

PART 1 -

1.1 SITE DESCRIPTION

A. Project Name and Location:

Hodges' Park Pier
21275 Keaton Beach Dr, Keaton Beach, FL 32348

B. Owner Name and Address:

Taylor County Board of County Commissioners
108 North Jefferson St., Suite 102, Perry, FL 32347
Perry, Florida 32347

C. The intent of this contract is to secure all labor, equipment and materials required for the Hodges Park - Pier Reconstruction project in Taylor County, Florida. This project includes complete removal and salvage/disposal of portions of the existing structure debris and new construction of a wooden piling pier as more fully detailed in the project plans and specifications. The following is a proposed construction sequence concerning sedimentation and erosion control.

1. Installing Perimeter sediment controls as indicated on the plan(s)
2. Complete removal/salvage and lawful disposal of existing pilings and structure debris
3. Construction of Wooden Piling Pier
4. Removal of Perimeter sediment controls after project completion and return of stability of disturbed areas

1.2 NAME OF RECEIVING WATERS

A. Gulf of Mexico

1.3 GENERAL

A. Scope

1. This section covers the stormwater management practices that the Contractor shall employ in accordance with the Environmental Resource Permit (ERP) permit governing storm water discharges during construction and in accordance with erosion control practices specified in other sections.

2. The Contractor shall manage the discharge of stormwater from the site in accordance with the ERP and this document. The Contractor shall be responsible for conducting the stormwater management practices in accordance with the permit. The Contractor shall be responsible for any enforcement action taken or imposed by Federal or State agencies, including the cost of fine, construction delays, and remedial actions resulting from the Contractor's failure to comply with the permit provisions.

3. The Contractor shall monitor the suitability of the designated management practices to achieve the stormwater quality provisions of the permit, and shall notify the Owner of the need to change management practices. If changes are ordered by the Owner, an adjustment in Contractor's fee shall be considered in accordance with the General Conditions. However, the Contractor's failure to monitor or report deficiencies to the Owner will result in the Contractor being liable for fines and construction delays from any Federal or State agency enforcement action.

1.4 EROSION AND SEDIMENT CONTROLS

A. Stabilization practices for this site include:

1. Minimized/Limited disturbance of adjacent unaffected areas.

2. Limit mooring/anchoring locations

B. Structural practices for this site include:

1. Floating Turbidity Barrier (Contractor shall keep a Turbidity Meter at the project site to measure project site and background (150m from site) turbidity as needed. Turbidity shall not be allowed to exceed 29 NTU's above natural background level).

C. Sequence of Major Activities

D. The general contractor will be responsible for implementing the following erosion control and stormwater management. The general contractor may designate these tasks to certain subcontractors as he sees fit, but the ultimate responsibility for implementing these controls and ensuring their proper functioning remains with the general contractor.

1.5 CONSTRUCTION SEQUENCE

A. Post all applicable permit placards. The permit placards shall not be nailed to trees

B. Construct/Install sedimentation control device(s) - Floating Turbidity Barrier.

C. Secure approval to commence construction from Architect/Engineer/Owner Representative

D. Remove/Salvage and lawfully dispose of existing structure debris with careful attention to avoid disturbance of adjacent unaffected areas and adjacent canal and jetty.

E. Install Wooden Pilings

F. Construct Pier Structure.

G. Install Signage and Location identifiers

H. Removal of sedimentation control device(s)

1.6 OTHER CONTROLS

A. Waste Disposal

1. In Section 104 of the Erosion Control Plan, the Contractor shall describe the proposed procedure to comply with applicable state and local regulations for waste disposal, sanitary sewer and septic systems. All waste materials will be collected and stored in accordance with all local and state solid waste management regulations.

B. Sanitary Waste

1. All sanitary waste will be collected from the portable units a minimum of three times per week by a licensed portable facility provider in complete compliance with local and state regulation.

C. Hazardous Substances and Hazardous Waste

1. All hazardous waste materials shall be disposed of in the manner specified by local, state, and/or federal regulations and by the manufacturer of such products. Site personnel will be instructed in these practices by the job site superintendent, who will also be responsible for seeing that these practices are followed. Material Safety Data Sheets (MSDS's) for each substance with hazardous properties that is used on the job site will be obtained and used for the proper management of potential wastes that may result from these products. An MSDS will be posted in the immediate area where such product is stored and/or used and another copy of each MSDS will be maintained in the SWPPP file at the job site construction trailer office. Each employee who must handle a substance with hazardous properties will be instructed on the use of MSDS sheets and the specific information in the applicable MSDS for the product he/she is using, particularly regarding spill control techniques.

2. The contractor will implement the Spill Prevention Control and Countermeasures (SPCC) Plan found within this SWPPP and will train all personnel in the proper cleanup and handling of spilled materials. No spilled hazardous materials or hazardous wastes will be allowed to come in contact with storm water discharges. If such contact occurs, the storm water discharge will be contained on site until appropriate measures in compliance with state and federal regulations are taken to dispose of such contaminated storm water. It shall be the responsibility of the job site superintendent to properly train all personnel in the use of the SPCC plan.

3. Any spills of hazardous materials which are in quantities in excess of Reportable Quantities as deemed by EPA regulations shall be immediately reported to the EPS National Response Center 1-800-424-8802.

4. In order to minimize the potential for a spill of hazardous materials to come into contact with stormwater the following steps will be implemented:

    a. All materials with hazardous properties (such as pesticides, petroleum products, fertilizers, detergents, construction chemicals, acids, paints, paint solvents, cleaning solvents, additives for soil stabilization, concrete curing compounds and additives, etc.) will be stored in source in a secure location, under cover, when not in use.

b. The minimum practical quantity of all such materials will be kept on the job site.

c. A spill control and containment kit (containing, for example, absorbent such as kitty litter or sawdust, acid neutralizing powder, brooms, dust pans, mops, rags, gloves, goggles, plastic and metal trash containers, etc.) will be provided at the storage site.

d. All of the products in a container will be used before the container is disposed of.

e. All products will be used in strict compliance with instructions on the product label.

f. The disposal of excess or used products will be in strict compliance with instructions on the product label.

1.7 CONTAMINATED SOILS

A. Any contaminated soils (resulting from spills of materials with hazardous properties) which may result from construction activities will be contained and cleaned up immediately in accordance with the procedures given in the Spill Prevention Control and Countermeasures (SPCC) Plan and in accordance with applicable state and federal regulations.

B. The job site superintendent will be responsible for seeing that these procedures are followed.

1.8 COMPLIANCE WITH FEDERAL, STATE, AND LOCAL REGULATIONS

A. Contractor will obtain copies of any and all local and state regulations which are applicable to storm management and pollution minimization at this job site and will comply fully with such regulations. The contractor will submit written evidence of such compliance if requested by the Owner or any agent of a regulatory body. Contractor will comply with all conditions of the ERP for Construction Activities, including the conditions related to maintaining the SWPPP and evidence of compliance with the SWPPP at the job site and allowing regulatory personnel access to the job site and to records in order to determine compliance.

B. Owner has petitioned the appropriate regulatory agencies for authorization and recommended measures needed in dealing with endangered species located on the site.

1.9 MAINTENANCE INSPECTION PROCEDURES

A. Erosion and Sediment Control Maintenance and Inspection Practices

B. The following is a list of erosion and sediment controls to be used on this site during construction practice.

1. Stabilization practices for this site include:

a. Minimized/Limited disturbance of adjacent unaffected areas

b. Limit mooring/anchoring locations

2. Structural practices for this site include:

   a. Floating Turbidity Barrier (Contractor shall keep a Turbidity Meter at the project site to measure project site and background (150m from site) turbidity as needed. Turbidity shall not be allowed to exceed 29 NTU's above natural background level).

3. The following inspection and maintenance practices will be used to maintain erosion and sediment controls.

   a. All control measures will be inspected before and upon completion of any project activity but no less than at least once each week until such measures are approved for removal.

   b. All measures shall be maintained in good working order. If repairs are found to be necessary, they must be initiated within 7 days of report.

   c. A maintenance inspection report will be made after each inspection.

   d. The job site superintendent will be responsible for selecting the individuals who will be responsible for these inspections, maintenance and repair activities, and filling out inspection and maintenance reports.

   e. Personnel selected for the inspection and maintenance responsibilities will receive training from the job site superintendent. They will be trained in all inspection and maintenance practices necessary for keeping the erosion and sediment controls that are used onsite in good working order.

   f. Inspectors shall complete the forms provided in Appendix A when performing all inspections.

1.10 SPILL PREVENTION CONTROL AND COUNTERMEASURE (SPCC) PLAN

A. MATERIALS COVERED

B. The following materials or substances with known hazardous properties are expected to be present onsite during construction:

   Petroleum based products

C. MATERIAL MANAGEMENT PRACTICES

   1. The following are the material management practices that will be used to reduce the risk of spills or other accidental exposure of materials and substances to storm water runoff.

D. GOOD HOUSEKEEPING

   1. The following good housekeeping practices will be followed onsite during the construction project:

a. An effort will be made to store only enough products required to do the job.

b. All materials stored onsite will be stored in a neat, orderly manner and, if possible, under a roof or other enclosure.

c. Products will be kept in their original containers with the original manufacturer's label in legible condition.

d. Substances will not be mixed with one another unless recommended by the manufacturer.

e. Whenever possible, all of a product must be used up before disposing of the container.

f. Manufacturer's recommendations for proper use and disposal must be followed.

g. The job site superintendent shall be responsible for ensuring proper use and disposal of materials.

E. HAZARDOUS PRODUCTS

1. These practices shall be used to reduce the risks associated with hazardous materials:

a. Products must be kept in original containers with the original labels in legible condition.

b. Original labels and material safety data sheets (MSDS's) must be procured and used for each material.

c. Product containers and any surplus product must be disposed of per manufacturer's or local/state/federal government recommended methods.

d. A spill control aid containment kit (containing, for example, absorbent such as kitty litter or sawdust, acid neutralizing powder, brooms, dust pans, mops, rages, gloves, goggles, plastic and metal trash containers, etc.) shall be provided at the storage site.

F. PRODUCT SPECIFIC PRACTICES

1. The following product specific practices will be followed on the job site:

G. PETROLEUM PRODUCTS

1. All onsite vehicles/equipment shall be monitored for leaks and receive regular preventative maintenance to reduce the chance of leakage. Petroleum products must be stored in tightly sealed containers, which are clearly labeled. Any petroleum storage tanks used on site will be installed per all appropriate local/state/federal regulations. Any asphalt substances used onsite shall be applied according to the manufacturer's recommendations.

H. SPILL PREVENTION PLAN

1. Manufacturer's recommended methods for spill cleanup will be clearly posted and site personnel will be trained regarding these procedures and the location of the information and cleanup.

2. Materials and equipment necessary for spill cleanup will be kept in the material storage area onsite in the spill control and containment kit (containing, for example, absorbent such as kitty litter or sawdust, acid neutralizing powder, brooms, dust pans, mops, rags, gloves, goggles, plastic and metal trash containers, etc.)

3. All spills shall be cleaned up immediately after discovery.

4. Spills of toxic or hazardous materials shall be reported to the appropriate federal, state, and/or local government agency, regardless of the size of the spill. Spills of amounts that exceed Reportable Quantities of certain substances specifically mentioned in federal regulations (40 CFR 302 list and oil) shall be immediately reported to the EPA National Response Center, telephone 1-800-424-8802. Reportable Quantities of some substances which may be used at the job site are as follows:

   Oil-appearance of a film or sheen on water
   Pesticides usually 1 lb.
   Acids 5000 lb.
   Solvents, flammable 100 gal.

1.11 OWNER CERTIFICATION

"I certify under penalty of law that this document and all attachments were prepared under my direction or supervision in accordance with a system designed to assure that qualified personnel properly gathered and evaluated the information submitted. Based on my inquiry of the person or persons who manage the system, or those persons directly responsible for gathering the information, the information submitted is, to the best of my knowledge and belief, true, accurate, and complete. I am aware that there are significant penalties for submitting false information, including possibility of fine and imprisonment for knowing violations."

Signed:_____ Position:_____

Printed Name:_____ Date:_____

1.12 CONTRACTOR'S CERTIFICATION

"I certify under penalty of law that I understand the terms and conditions of the general National Pollutant Discharge Elimination System (NPDES) permit that authorizes the stormwater discharges associated with industrial activity from the construction site identified as part of this certification. Further, by my signature, I understand that I am becoming a co-permittee, along with the owners(s) and other contractors and subcontractors signing such certifications, to the general NPDES stormwater permit for the stormwater discharges associated with industrial activity from the identified site. As a co-permittee, I understand that I, and my company, are legally required under the Clean Water Act, to ensure compliance with the terms and conditions

for the Storm Water Pollution Prevention Plan (SWPPP) developed under the NPDES storm water permit and the terms of the NPDES storm water permit."

Signature: Company Name: Responsible For:

SCHEDULE OF WORK ACTIVITIES

Dates	Activity
_____	Construct/Install Sediment Control Device(s) – Floating Turbidity Barrier
_____	Remove and lawfully dispose of pre-existing structure debris from site location. Do not disturb any of the surrounding unaffected areas and fishery structures (culverts, etc.)
_____	Install Wooden Pilings
_____	Construct Pier Structure
_____	Removal of Sedimentation Control Device(s)

Stormwater Pollution Prevention Plan Inspection Report Form

Inspections must occur at least once a week and within 24 hours of the end of a storm event that is 0.50 inches or greater.

Project Name:_____ FDEP NPDES Stormwater Identification Number: FLR10_____

Location	Rain data	Type of control (see below)	Date installed / modified	Current Condition (see below)	Corrective Action / Other Remarks

Condition Code:

G = Good M = Marginal, needs maintenance or replacement soon P = Poor, needs immediate maintenance or replacement

C = Needs to be cleaned O = Other

Control Type Codes

1. Silt Fence	10. Storm drain inlet protection	19. Reinforced soil retaining system	28. Tree protection
2. Earth dikes	11. Vegetative buffer strip	20. Gabion	29. Detention pond
3. Structural diversion	12. Vegetative preservation area	21. Sediment Basin	30. Retention pond
4. Swale	13. Retention Pond	22. Temporary seed / sod	31. Waste disposal / housekeeping
5. Sediment Trap	14. Construction entrance stabilization	23. Permanent seed / sod	32. Dam
6. Check dam	15. Perimeter ditch	24. Mulch	33. Sand Bag
7. Subsurface drain	16. Curb and gutter	25. Hay Bales	34. Other
8. Pipe slope drain	17. Paved road surface	26. Geotextile	
9. Level spreaders	18. Rock outlet protection	27. Rip-rap	

Inspector Information:

_____ _____ _____

Name Qualification Date

The above signature also shall certify that this facility is in compliance with the Stormwater Pollution Prevention Plan and the State of Florida Generic Permit for Stormwater Discharge from Large and Small Construction Activities if there are not any incidents of non-compliance identified above.

* * * * * *

"I certify under penalty of law that this document and all attachments were prepared under my direction or supervision in accordance with a system designed to assure that qualified personnel properly gathered and evaluated the information submitted. Based on my inquiry of the person or persons who manage the system, or those persons directly responsible for gathering the information, the information submitted is, to the best of my knowledge and belief, true, accurate, and complete. I am aware that there are significant penalties for submitting false information, including the possibility of fine and imprisonment for knowing violations."

_____ _____

Name (Responsible Authority) Date

END OF SECTION 02010

SECTION 02050 - DEMOLITION

PART 1 - GENERAL

1.1 RELATED DOCUMENTS

A. Drawings and general provisions of the Contract, including General and Supplementary Conditions and Division 1 Specification Sections, apply to this Section.

1.2 SCOPE OF WORK

A. Unless noted otherwise, the work includes demolition and removal of all materials and debris at proposed project site not noted to be salvaged to Owner. Materials resulting from demolition work shall become the property of the Contractor and shall be removed from the limits of the property and disposed of in a manner which is legal and in accordance with local codes.

1. Existing undamaged pilings shall be salvaged and cleaned of connectors/hardware prior to delivery to Owner at the Public Works Department located at US HWY 27 E, Perry, FL, 32347. Such deliveries shall be coordinated during normal work hours through Hank Evans, Public Works Director (850.838.3529).

1.3 PROTECTION

A. Protect contiguous and nearby structures from danger by temporary covers, shoring, bracing, and supports. Repair or replace items damaged during the performance of the work at no expense to Owner.

B. Where pedestrian or vehicle driver safety is endangered in the area of the demolition and removal work, erect barricades with flashing lights. Provide flagmen for traffic control, if required.

C. Contractor's insurance shall specifically hold harmless the owner of the property from all claims arising from the demolition work. Contractor shall procure and shall maintain during the life of this Contract, "Worker's Compensation Insurance" as required by State and Federal law. In addition, Contractor shall procure and shall maintain during the life of this Contract, "Contractor's Public Liability and Property Damages Insurance and Vehicle Liability Insurance" in an amount of not less than $1,000,000 for injuries, including accidental death, to any one person, and subject to the same limit for each person, in an amount not less than $1,000,000 on account of one accident, and "Contractor's Property Damage Insurance" in an amount of not less than $1,000,000.

1.4 SUBMITTAL

A. Contractor shall furnish Owner with Certificates of Insurance showing the type, amount, class of operations covered, effective dates, and date of expiration of policies for both the Contractor and his/her subcontractors.

B. Contractor shall prepare a detailed description and schedule of the proposed procedure to accomplish the demolition and removal of demolished materials and debris and shall submit such description to Owner for approval before commencing work. The procedure shall provide for careful removal and disposition of material specified to be salvaged, coordination with other work in progress, and a disconnection schedule of utility services. The procedures shall include a detailed description of the methods and equipment to be used for each operation, and the proposed sequence of operation.

1.5 EXPLOSIVES

A. Use of explosives shall not be permitted.

PART 2 - PRODUCTS (Not Used)

PART 3 - EXECUTION

3.1 PREPARATION

A. Disconnection of utility services as required shall be coordinated with the Agency responsible for the service before the start of work.

3.2 DEMOLITION

A. Unless noted otherwise, the entire structure shall be demolished including pilings, foundations, structure members, connectors, etc.

B. When utility lines are encountered, Contractor shall contact the respective utility owner/operator to arrange for removal or relocation as necessary.

C. Salvage materials (Contractor's portion) shall be removed from Owner's property daily. Materials of value shall not be sold at the project site. All materials shall be fully and completely removed. No materials shall be buried within the project limits.

D. Debris and rubbish shall be removed and transported in a manner that will prevent spillage in the water or on the streets or adjacent properties. All regulations and fees for disposal are the responsibility of Contractor.

3.3 RESTORATION OF SITE

A. After the demolition is complete, Contractor shall ensure that all trash and debris resulting from the demolition activities have been removed and the area thoroughly policed for litter.

B. If Owner does not request that additional fill dirt be brought in, then Contractor shall grade the area as smooth and level as possible. The area shall then be seeded & mulched in accordance with these specifications and/or local requirements.

C. If Owner does request that additional fill dirt be brought in, then Contractor shall bring in the required quantity of select fill dirt and compact and test the backfill in accordance with Section 02200, Earthwork. The area shall then be graded smooth and level and seeded & mulched.

END OF SECTION 02050

SECTION 06100 – ROUGH CARPENTRY

PART 1 - GENERAL

1.1 RELATED DOCUMENTS

A. Drawings and general provisions of the Contract, including General and Supplementary Conditions and Division 1 Specification Sections, apply to this Section.

1.2 SUMMARY

A. This Section includes the following:

1. Wood blocking cants, nailers, curbs, stripping, sills, furring, and similar members.
2. Wood members for marine and marina applications

B. Related Sections include the following:

1. None.

1.3 DEFINITIONS

A. Lumber grading agencies, and the abbreviations used to reference them, include the following:

1. AWPA – American Wood Protection Association

2. NELMA – Northeastern Lumber Manufacturers Association.

3. NLGA – National Lumber Grades Authority.

4. SPIB – Southern Pine Inspection Bureau.

5. WCLIB – West Coast Lumber Inspection Bureau.

6. WWPA – Western Wood Products Association.

1.4 SUBMITTALS

A. Product Data: For each type of process and factory-fabricated product. Indicate component materials and dimensions and include construction and application details.

1. Include data for wood-preservative treatment from chemical treatment manufacturer and certification by treating plant that treated materials comply with requirements. Indicate type of preservative used, net amount of preservative retained, and chemical treatment manufacturer's written instructions for handling, storing, installing, and finishing treated material.

2. Include data for fire-retardant treatment from chemical treatment manufacturer and certification by treating plant that treated materials comply with requirements. Include physical properties of treated materials, both before and after exposure to elevated temperatures when tested according to ASTM D 5516 and ASTM D 5664.

3. For products receiving a waterborne treatment, include statement that moisture content of treated materials was reduced to levels specified before shipment to project site.

4. Include copies of warranties from chemical treatment manufacturers for each type of treatment.

B. Research/Evaluation Reports: For the following, showing compliance with building code in effect for Project:

1. Preservative-treated wood.

2. Fire-retardant-treated wood.

1.5 DELIVERY, STORAGE AND HANDLING

A. Stack lumber, plywood, and other panels; place spacers between each bundle to provide air circulation. Provide for air circulation around stacks and under coverings.

PART 2 - PRODUCTS

2.1 WOOD PRODUCTS GENERAL

A. Lumber: DOC PS 20 and applicable rules of lumber grading agencies certified by the ALSC Board of Review.

1. Factory mark each piece of lumber with grade stamp of grading agency.

2. Where nominal sizes are indicated, provide actual sizes required by DOC PS 20 for moisture content specified. Where actual sizes are indicated, they are minimum dressed sizes for dry lumber.

3. Provide dressed lumber, surfaced four sides (S4S), unless otherwise indicated.

4. Provide seasoned dry lumber with 19 percent maximum moisture content at time of dressing for 2-inch nominal thickness or less, unless otherwise indicated.

2.2 WOOD-PRESERVATIVE-TREATED MATERIALS

A. Preservative Treatment by Pressure Process: Treatments shall be applied and consistent with the American Wood Protection Association Standard, latest edition.

B. Kiln-dry material after treatment to a maximum moisture content of 19 percent for lumber and 15 percent for plywood. Do not use material that is warped or does not comply with requirements for untreated material.

C. Mark each treated item with the treatment quality mark of an inspection agency approved by the American Lumber Standards Committee Board of Review.

D. Application: Treat items indicated on Drawings, and the following:

1. Pressure treat above ground items with waterborne preservatives to a minimum retention based on AWPA UC3B requirements (0.25 lb/cubic ft. ACQ/ACZA).

a. Wood cants, nailers, curbs, stripping, and similar members in connection with roofing, flashing vapor barriers, and waterproofing.

b. Wood sills, sleepers, blocking, furring, stripping, and similar concealed members in contact with masonry or concrete.

c. Wood framing members less than 18 inches above grade.

2. Pressure treat wood members in contact with ground or freshwater with waterborne preservatives to a minimum retention based on AWPA UC4C requirements (0.40 lb/cubic ft. ACQ/ACZA).

3. Pressure treat wood members for marine applications:

a. Above ground and out of water but subject to splash items with waterborne preservatives to a minimum retention based on AWPA UC4A requirements (0.31 CA or 0.60 lb/cubic ft. ACQ/ACZA).

b. In brackish or saltwater use and subject to marine borer attack items with waterborne preservatives to a minimum retention based on AWPA UC5C requirements (2.5 lb/cubic ft. CCA/ACZA).

2.3 FIRE-RETARDANT-TREATED MATERIALS

A. General: Where fire-retardant-treated materials are indicated, provide materials that comply with performance requirements in AWPA UFCA (C20) and AWPA UFCB (C27). Identify fire-retardant-treated wood with appropriate classification acceptable to authorities having jurisdiction.

1. Use treatment for which chemical manufacturers publish physical properties of treated wood after exposure to elevated temperatures when tested by a qualified independent testing agency according to ASTM D 5664 and ASTM D 5516.

2. Use treatment that does not promote corrosion of metal fasteners.

B. All lumber within the envelope of the building shall be fire retardant treated.

2.4 WOODEN PILINGS

A. General: Provide round timber piles of Southern Pine for support members of the Pier Structure.

1. Strength and Physical Characteristics: Meet ASTM D25 specification
2. Exposure Durability Classification: AWPA UC5C; Saltwater Contact, Marine Construction
3. Preservative and Retention Rating: 2.50 lb/cf of CCA, C18
4. Quality of Piling: Class #2

2.5 DIMENSION LUMBER

A. General: If not indicated on Contract documents, provide dimension lumber of any species and grades indicated for applicable use category listed in table below. Lumber shall comply with AITC's American Lumber Standards Committee's National Grading Rule (NGR) provisions of inspection agency applicable to species.

PRODUCT (Nominal Dimension)	GRADE	USE
Structural Light Framing 2 to 4 inches thick 2 to 4 inches wide	Select Structural No. 1 No. 2 No. 3	Structural applications where highest design values are needed in light framing sizes.
Light Framing 2 to 4 inches thick 2 to 4 inches wide	Construction Standard Utility	Where high-strength values are not required, such as wall framing, plates, sills, cripples, and blocking.
Stud 2 to 4 inches thick 2 inches and wider	Stud	Optional all-purpose grade designed primarily for stud uses, including bearing walls.
Structural Joists and Planks 2 to 4 inches thick 5 inches and wider	Select Structural No. 1 No. 2 No. 3	Intended to fit engineering applications for lumber nominal 5 inches and wider, such as joists, rafters, headers, beams, trusses, and general framing.

B. Species and grades must meet or exceed the following values, unless indicated otherwise on Contract documents.

1. Fb (extreme fiber stress in bending): Minimum 850 psi.
2. E (modulus of elasticity): Minimum 1,400,000 psi.

C. Exposed Framing: Refers to dimension lumber which is not concealed by other work, and is indicated to receive stained, painted, and or natural finish.

D. Provide material hand-selected from lumber of species and grade indicated for type of use, for uniformity of appearance, and freedom from characteristics that would impair finish appearance.

2.6 MISCELLANEOUS LUMBER

A. General: Provide lumber for support or attachment of other construction, including rooftop equipment curbs and support bases, cant strips, bucks, nailers, blocking, furring, grounds, stripping, and similar members.

B. Fabricate miscellaneous lumber from dimension lumber of sizes indicated, and into shapes shown on Contract documents.

C. Moisture Content: 19 percent maximum for lumber items not specified to receive wood preservative treatment.

D. Grade and Species: For dimension lumber sizes, provide No. 3 or Standard grade lumber per AITC's American Lumber Standards Committee's NGRs of any species. For board-size lumber, provide No. 3 Common or Standard grade per WWPA of any species.

2.7 WOOD-BASED STRUCTURAL-USE PANELS, GENERAL

A. Structural-Use Panel Standards: Panel thickness, grade, veneer qualities and group number or span rating, shall be as shown on Drawings, and in accordance with recommendations of APA. Comply with PS 1 for plywood panels, and PS 2 for products not manufactured under PS 1 provisions.

1. Panels which have any edge or surface permanently exposed to weather shall be classed Exterior Grade.
2. Panel thickness, grade, and group number or span rating shall be at least equal to that needed to comply with requirements specified but not less than thickness shown on Drawings.
3. Comply with "Code Plus" provisions in APA Form No. E30k, "APA Design/Construction Guide: Residential & Commercial."

B. Trademark: Factory-mark each structural-use panel with APA trademark evidencing compliance with grade requirements.

2.8 CONCEALED, PERFORMANCE-RATED STRUCTURAL-USE PANELS

A. General: Where structural-use panels are indicated for concealed types of applications, provide APA performance rated panels complying with requirements indicated for grade designation, span rating, exposure durability classification, and edge detail (where applicable).

1. Provide panel clips for edge support as recommended by panel manufacturer, or where required by IBC.
2. Provide panels of thickness meeting requirements specified, but not less than thickness indicated.

B. Combination Subfloor-Underlayment: APA-rated Sturd-I-Floor.

1. Exposure Durability Classification: Exposure 1.
2. Span Rating: As required to suit joist spacing indicated.

3. Edge Detail: Tongue and groove.
4. Surface Finish: Fully sanded face.

C. Subflooring: APA-rated sheathing.

1. Exposure Durability Classification: Exposure 1.
2. Span Rating: As required to suit joist spacing indicated.

D. Wall Sheathing: APA-rated sheathing.
1. Exposure Durability Classification: Exposure 1. Where sheathing is exposed on any side, it shall be exposure durability classification "Exterior."
2. Span Rating: As required to suit stud spacing indicated.

E. Roof Sheathing: APA-rated sheathing.

1. Exposure Durability Classification: Exposure 1.
2. Span Rating: As required to suit joist or truss spacing indicated.

2.9 STRUCTURAL-USE PANELS FOR BACKING

A. Plywood Backing Panels: For mounting electrical or telephone equipment, provide fire-retardant-treated plywood panels with grade C-D plugged Exposure 1, in thickness indicated on Contract documents or, if not otherwise indicated, not less than 15/32 inch thick.

2.10 STRUCTURAL-USE PANELS FOR UNDERLAYMENT

A. General: Over smooth subfloors, provide underlayment not less than 1/4 inch thick. Over board or uneven subfloors, provide underlayment not less than 11/32 inch thick.

B. Plywood Underlayment for Resilient Flooring: For underlayment under 19/32 inch thick, provide plywood panels with fully sanded face, APA Underlayment grade, Exposure 1.

C. Structural-Use Panel Underlayment for Resilient Flooring: For underlayment 19/32 inch thick or more, provide fully sanded, veneer-faced, APA-rated, Sturd-I-Floor panels, Exposure 1.

D. Plywood Underlayment for Ceramic Tile: Provide APA-rated, Underlayment grade, exterior plywood, 5/8 inch thick, for ceramic tile set in epoxy mortar.

E. Plywood Underlayment for Carpet: For underlayment under 19/32 inch thick, provide plywood panels with fully sanded face, APA Underlayment grade, Exposure 1.

F. Structural-Use Panel Underlayment for Carpet: For underlayment 19/32 inch thick or more, provide APA-rated Sturd-I-Floor panels with touch-sanded face, Exposure 1.

2.11 PARTICLE BOARD

A. General: Comply with and factory mark each panel according to ANSI A208.1. Provide thickness indicated on Contract documents.

B. Particleboard Underlayment: Grade PBU.

C. Particleboard Subflooring: Grade M-3-Exterior Glue.

D. Particleboard Wall Sheathing: Grade M-1-Exterior Glue.

2.12 FASTENERS

A. General: Provide fasteners of size and type indicated that comply with requirements specifies in this Article for material and manufacture.

1. Where carpentry is exposed to weather, in ground contact, or in area of high relative humidity, provide fasteners with hot-dip zinc coating complying with ASTM A153 or of Type 304 (18/8) Stainless Steel. Where carpentry is exposed to marine environment provide fasteners of Type 316 (18/10) Stainless Steel.

2. Where carpentry is exposed to salt and\or water environment provide stainless steel fasteners complying with ASTM F593, A 316 alloy, unless noted otherwise.

B. Nails, Wire, Braids, and Staples: FS FF-N-105.

C. Power-Driven Fasteners: CABO NER-272.

D. Wood Screws: ASME B18.6.1., ASTM F879

E. Screws for Fastening to Cold-Formed Metal Framing: ASTM C 954, except with wafer heads and reamer wings, length as recommended by screw manufacturer for material being fastened.

F. Lag Bolts: ASME B18.2.1. Stainless (Grade 18/10-Marine Applications, Others-18/8)

G. Bolts: Steel bolts complying with ASTM A 307 with ASTM A 563 hex nuts and, where indicated, flat washers. Stainless Steel bolts complying with ASTM F 593 with ASTM F 594 hex nuts and, where indicated, flat washers.

H. Expansion Anchors: Anchor bolt and sleeve assembly of material indicated below with capability to sustain, without failure, a load equal to 6 times the load imposed when installed in unit masonry assemblies and equal to 4 times the load imposed when installed in concrete as determined by testing per ASTM E 488 conducted by a qualified independent testing and inspection agency.

1. Material: Carbon-steel components, zinc plated to comply with ASTM B 633, Class Fe/Zn 5.

PART 3 - EXECUTION

3.1 INSTALLATION, GENERAL

A. Discard units of material with defects that impair quality of carpentry and that are too small to use with minimum number of joints or optimum joint arrangement.

B. Set carpentry to required levels and lines, with members plumb, true to line, cut, and fitted. Fit carpentry to other construction; scribe and cope as needed for accurate fit. Locate nailers, blocking, grounds, and similar supports to comply with requirements for attaching other construction.

C. Apply field treatment complying with AWPA M4 to cut surfaces of preservative-treated lumber and plywood.

D. Securely attach carpentry work as indicated and according to applicable codes and recognized standards.

E. Countersink fastener heads on exposed carpentry work and fill holes with wood filler.

F. Use fasteners of appropriate type and length. Predrill members when necessary to avoid splitting wood; fasten panel products to allow for expansion at joints unless otherwise indicated.

3.2 WOOD GROUND, BLOCKING, AND NAILER INSTALLATION

A. Install where indicated and where required for screeding or attaching other work. Coordinate locations with other work involved.

B. Attach items to substrates to support applied loading. Recess bolts and nuts flush with surfaces, unless otherwise indicated.

3.3 WOOD FRAMING, GENERAL

A. Framing Standard: Comply with AFPA's "Manual for Wood Frame Construction" unless noted otherwise.

B. Framing with Engineered Wood Products: Install engineered wood products to comply with manufacturer's written instructions.

C. Install framing members of size and at spacing indicated.

D. Do not splice structural members between supports.

END OF SECTION 06100

PART 5 – DRAWINGS (BOUND SEPARATELY)

TAYLOR COUNTY
BOARD OF COUNTY COMMISSIONERS

HODGE'S PARK PIER
2017 RECONSTRUCTION PROJECT

TAYLOR COUNTY PROJECT NO. 2017-001-ENG

PLAN INDEX

SHEET	DESCRIPTION
1	COVER & CONTENTS
2	GENERAL NOTES
3	AERIAL OVERVIEW
4~5	EXISTING CONDITIONS
6	PIER ISOMETRIC VIEW
7	PIER PLAN VIEW
8	PIER SECTION VIEW
9	PAVILION ISOMETRIC VIEW
10	PAVILION FLOOR FRAMING (BOTTOM VIEW)
11	PAVILION SECTION VIEW
12	PAVILION ROOF PLAN
13~14	CONSTRUCTION DETAILS

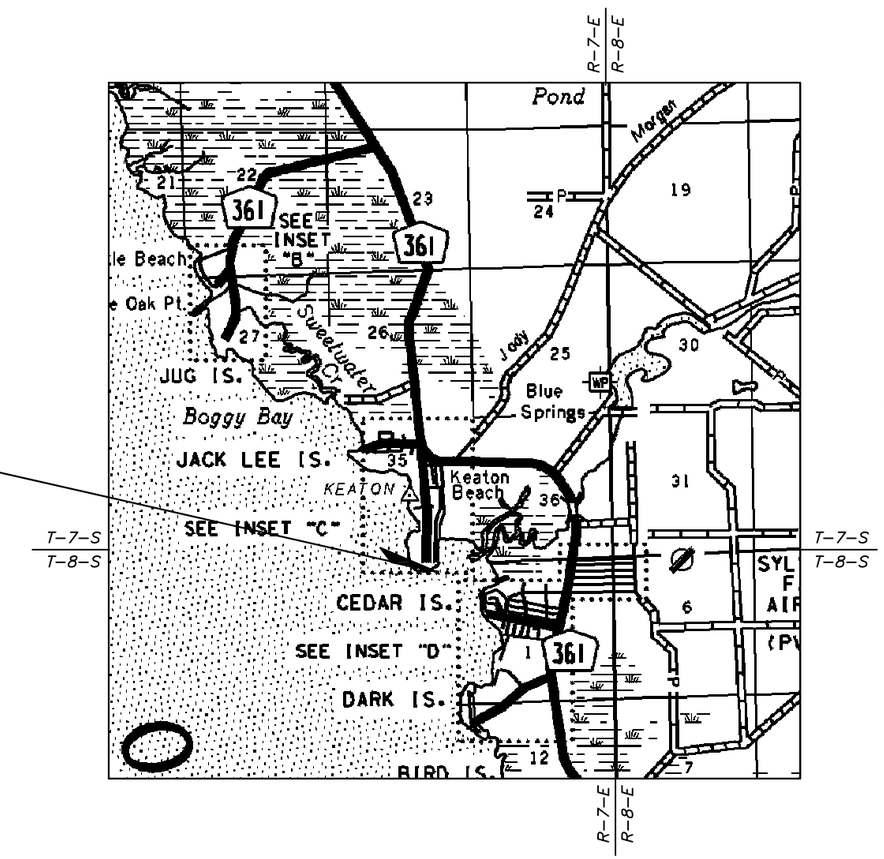

HODGE'S PARK PIER

LAT 29° 58' 35.772" N
LONG 83° 47' 16.587" W

VICINITY MAP
N.T.S.

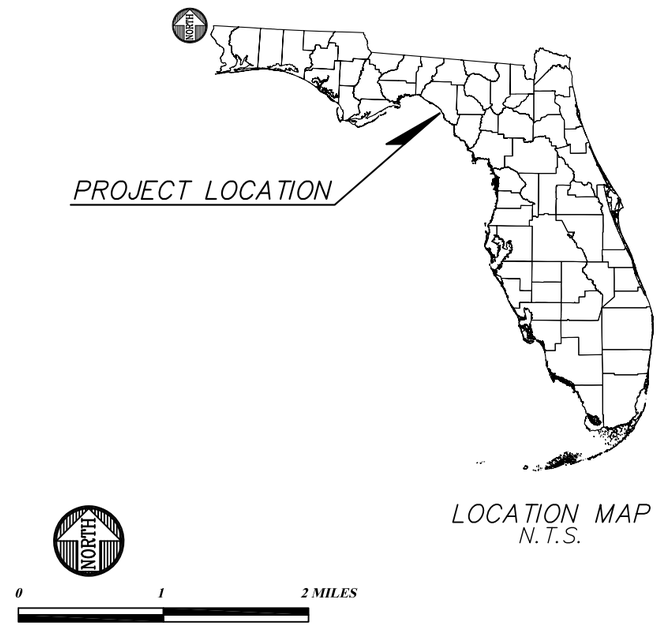

LOCATION MAP
N.T.S.

SHOP DRAWINGS TO BE SUBMITTED TO:

KENNETH DUDLEY, P.E.
TAYLOR COUNTY ENGINEERING DIVISION
201 EAST GREEN STREET
PERRY, FL 32347

NOTE: THE SCALE OF THESE PLANS MAY HAVE CHANGED DUE TO REPRODUCTION.

ENGINEER OF RECORD: KENNETH DUDLEY
P.E. NO.: 58014

GOVERNING STANDARDS AND SPECIFICATIONS:
AMERICAN WOOD PRESERVATIVES ASSOCIATION, FLORIDA DEPARTMENT OF TRANSPORTATION, DESIGN STANDARDS, 2017 EDITION; STANDARD SPECIFICATIONS FOR ROAD AND BRIDGE CONSTRUCTION, 2017 EDITION; AND TAYLOR COUNTY LAND DEVELOPMENT REGULATIONS, AS AMENDED BY CONTRACT DOCUMENTS.

TAYLOR COUNTY ENGINEERING DIVISION
BOARD OF COUNTY COMMISSIONERS
201 E. GREEN STREET PERRY, FL. 32347
PH: (850) 838-3500 FAX: (850) 838-3501
E-MAIL: county.engineer@taylorcountygov.com

0 1" VERIFY SCALE

PROJECT NO.	2017-001-ENG
PROJECT NAME	HODGE'S PARK PIER RECONSTRUCTION
SHEET NO.	1
SHEET TITLE	COVER & CONTENTS
DESIGNED BY	KRD
DRAWN BY	KRD
CHECKED BY	V. BLANCO
APPROVED BY	BOCC
DATE	3/28/17
SCALE	NTS
SHEET 1 OF 14	
SEAL	KENNETH R. DUDLEY 58014
REVISION	
DATE	
PLOT DATE	3/28/2017 1:41 PM
FILE NAME	2017_PIER.DWG

GENERAL NOTES:

1. CONTRACTOR SHALL USE THE REMAINS OF THE EXISTING PIER AND PAVILION TO ESTABLISH THE ALIGNMENT AND ELEVATION OF THE NEW REPLACEMENT STRUCTURE. NO DEVIATIONS ARE PERMITTED OTHER THAN THE WIDER STANCE OF THE PIER PILINGS.

2. ALL PILING AND LUMBER USED SHALL BE NEW AND PRESSURE TREATED FOR MARINE CONSTRUCTION PER AWPA EXCEPT FOR ROOF PURLINS MUST BE UNTREATED.

3. ALL FASTENERS, BOLTS, WASHERS, NUTS, NAILS AND HURRICANE CONNECTORS SHALL BE STAINLESS STEEL UNLESS NOTED OTHERWISE.

4. ALL PILINGS SHALL BE EMBEDDED TO THE REQUIRED DEPTH USING ACCEPTABLE MEANS TO INCLUDE JETTING, DRIVEN, AUGURED, OR DRILLED. CONTRACTOR SHALL ANTICIPATE AND PLAN FOR ENCOUNTERING SOME ROCK IN THIS AREA. CONTRACTOR SHALL MAINTAIN A LOG BOOK OF PILING EMBEDMENT DEPTHS TO BE AVAILABLE FOR INSPECTION PERIODICALLY AND PROVIDED TO OWNER AT COMPLETION OF PROJECT.

5. FULL LENGTH PILES, BENTS AND BRACING ARE REQUIRED, NO SPLICING WILL BE ACCEPTED. PAVILION AND PIER DECKING SHALL BE A SINGLE FULL WIDTH MEMBERS.

6. ALL DEMOLITION AND CONSTRUCTION DEBRIS SHALL ME REMOVED FROM THE SITE AND LAWFULLY DISPOSED OF BY CONTRACTOR. ANY AND ALL ITEMS FALLING INTO THE WATER SHALL BE RETRIEVED AND DISPOSED OF PROPERLY.

7. IDLE SPEED IS REQUIRED IF OPERATING A VESSEL IN THE CONSTRUCTION AREA. ALL EQUIPMENT MUST BE SHUTDOWN IF A MANATEE COMES WITHIN 50 FEET OF THE OPERATION. A COLLISION WITH AND/OR INJURY TO A MANATEE SHALL BE REPORTED IMMEDIATELY TO THE FLORIDA FISH AND WILDLIFE CONSERVATION COMMISSION AT 1-888-404-FWCC (3922).

8. CONTRACTOR SHALL PROMINENTLY DISPLAY AND MAINTAIN IN LEGIBLE CONDITION THE FLORIDA DEPARTMENT OF ENVIRONMENTAL PROTECTION MANATEE CAUTION INFORMATION FLYER ON ALL WATERBORNE VESSEL(S) USED FOR THIS PROJECT. SIGN AVAILABLE AT HTTP://MYFWC.COM/MEDIA/415118/MANATEE_CAUTIONSHUTDOWN.PDF.

9. CONTRACTOR SHALL USE BEST MANAGEMENT PRACTICES TO CONTROL SEDIMENT ISSUES TO INCLUDE FLOATING TURBIDITY BARRIER IF NECESSARY; TURBIDITY SHALL BE ALLOWED TO EXCEED 29 NTU'S ABOVE BACKGROUND LEVEL 150 M AWAY FROM CENTER OF ACTIVITY,. CONTRACTOR SHALL MAINTAIN A WORKING TURBIDITY METER ON-SITE AT ALL TIMES.

10. CONTRACTOR SHALL REMOVE HARDWARE AND FASTENERS FROM SALVAGED PILINGS PRIOR TO DELIVERING TO OWNER AT PUBLIC WORKS FACILITY LOCATED AT 587 US HWY 27 EAST., PERRY, FL 32347. COORDINATE DELIVERY WITH HANK EVANS, PUBLIC WORKS DIRECTOR AT 850-838-3529.

11. DESIGN LOADS: DEAD = 10 PSF; LIVE = 90 PSF

MATERIALS:

LUMBER:
1) 4X4 NOMINAL-PRESSURE TREATED PINE (0.60 LB ACQ, AWPA UC4A), HANDRAIL MID-SPAN POST
2) 2X4 NOMINAL-UNTREATED PINE, PURLINS
3) 2X4 NOMINAL-PRESSURE TREATED PINE (0.60 LB ACQ, AWPA UC4A), GUARDRAILS, SEATING, PURLINS
4) 2X6 NOMINAL-PRESSURE TREATED PINE (0.60 LB ACQ, AWPA UC4A), DECKING, PAVILION HANDRAILS
5) 2X8 NOMINAL-PRESSURE TREATED PINE (0.60 LB ACQ, AWPA UC4A), SEAT SUPPORTS, HEADER, PIER HANDRAILS
5) 2X8 NOMINAL-PRESSURE TREATED PINE (0.60 LB ACQ, AWPA UC4A), RUNNER (GRADE 1-2X8 OR GRADE 2-2X10)
6) 2X10 NOMINAL-PRESSURE TREATED PINE (2.50 LB CCA, AWPA UC5C), DIAGONAL BRACE
7) 2X12 ROUGH-PRESSURE TREATED PINE (0.80 LB CCA, AWPA UC5C), BENTS

POLES:
1) POLE, SOUTHERN PINE, CLASS #2 - 8" ø TIP, 2.50 LB CCA SALTWATER TREATED, AWPA UC5C STD C18

FASTENERS:

ALL FASTENERS & FITTINGS TO BE STAINLESS STEEL OR HOT-DIPPED GALVANIZED (WHEN NOTED) FOR MARINE USE

1) BOLTS, A-316 SS, 1/2" X VARIED LENGTH COARSE THD. W/ NUTS & 2 EA 2" MIN, FLAT PLATE WASHERS, (NUTS & WASHERS TO MATCH BOLT MATERIAL)
2) BOLTS, A-316 SS, 3/4" X VARIED LENGTH COARSE THD. W/ NUTS & 2 EA 2" MIN, FLAT PLATE WASHERS, (NUTS & WASHERS TO MATCH BOLT MATERIAL)
3) SCREWS, A-316 SS #10 X 3" LENGTH FOR DECKING, HANDRAILS, HEADERS, RAFTERS, SEATING & MISCELLANEOUS
4) NAILS, SSNA10 SS RING SHANK NAILS (0.148" DIA X 1-1/2")
5) SIMPSON H10ASS HURRICANE CONNECTOR, PAVILION RAFTERS AND INTERIOR RUNNERS
6) SIMPSON HCP HURRICANE CONNECTOR, PAVILION HIP RAFTER AT HEADER
7) SIMPSON LTHMA HURRICANE CONNECTOR, 3 MEMBER RAFTERS AT PEAK
8) 1.25" GALVANIZED FENCING STAPLES, 9 GUAGE STEEL

MISCELLANEOUS:
1) 4" SOLAS MARINE TAPE (COAST GUARD APPROVED ADHESIVE BACKED WHITE PRISMATIC RETROREFLECTIVE)
2) 10 1/2 GUAGE (0.128 DIAMETER) GALVANIZED (GAW) WELDED WIRE MESH BLACK PVC COATED W/ SQUARE 2"X2" OPENING. RIVERDALE MILLS CORP PRODUCT (1-800-762-6374) OR EQUIVLAENT

PROJECT NO. 2017-001-ENG
SHEET NO. 2
SHEET 2 OF 14

PROJECT NAME HODGES PARK PIER RECONSTRUCTION
SHEET TITLE GENERAL NOTES
DATE 3/28/17
SCALE NTS

DESIGNED BY KRD
DRAWN BY KRD
CHECKED BY V. BLANCO
APPROVED BY BOCC

TAYLOR COUNTY ENGINEERING DIVISION
BOARD OF COUNTY COMMISSIONERS
201 E. GREEN STREET PERRY, FL. 32347
PH: (850) 838-3500 FAX: (850) 838-3501
E-MAIL: county.engineer@taylorcountygov.com

1" 0 VERIFY SCALE

SEAL KENNETH R. DUDLEY 58014

REVISION
DATE

PLOT DATE 3/28/2017 1:41 PM
FILE NAME 2017_PIER.DWG

CONTRACTOR SHALL USE REMAINS OF THE EXISTING PIER AND PAVILION TO ESTABLISH THE ALIGNMENT AND ELEVATION FOR THE NEW PIER. TO THE MAXIMUM EXTENT PRACTICAL, THE REPLACED PIER SHALL MATCH ITS ORIGINAL POSITION EXCEPT FOR A WIDER PILING FOOTPRINT.

Mean High Water Elevation 1.94' NGVD 1929 based on extension of tidal datum from FDEP MHW Survey File 1672.

TAYLOR COUNTY ENGINEERING DIVISION
BOARD OF COUNTY COMMISSIONERS
201 E. GREEN STREET PERRY, FL. 32347
PH: (850) 838-3500 FAX: (850) 838-3501
E-MAIL: county.engineer@taylorcountygov.com

0 1" VERIFY SCALE

PROJECT NO.	2017-001-ENG
PROJECT NAME	HODGES PARK PIER RECONSTRUCTION
SHEET NO.	3
SHEET TITLE	AERIAL OVERVIEW
SHEET 3 OF 14	
DESIGNED BY	KRD
DRAWN BY	KRD
CHECKED BY	V. BLANCO
APPROVED BY	BOCC
DATE	3/28/17
SCALE	NTS

SEAL
KENNETH R. DUDLEY
58014

DATE	REVISION

FILE NAME 2017_PIER.DWG
PLOT DATE 3/28/2017 1:41 PM

REMAINING SECTION OF PIER DAMAGED BY
UPHEAVAL FROM HURRICANE HERMINE

EXISTING MAIN PIER TO BE REMOVED AND REPLACED IN ITS ENTIRETY AND RECONSTRUCTED AS DETAILED IN THIS PLAN SET AND ASSOCIATED SPECIFICATIONS.

CONTRACTOR SHALL LAWFULLY DISPOSE OF ALL REMOVED/REPLACED MATERIAL.

UNDERSIDE OF PIER ENTRANCE FROM PARKING LOT

EXISTING PILINGS OF PIER STRUCTURE BETWEEN MAIN PIER AND PARKING LOT TO REMAIN. ALL BENTS, BRACING, DECKING, HANDRAIL & POSTS, HARDWARE AND HURRICANE STRAPS SHALL BE REPLACED.

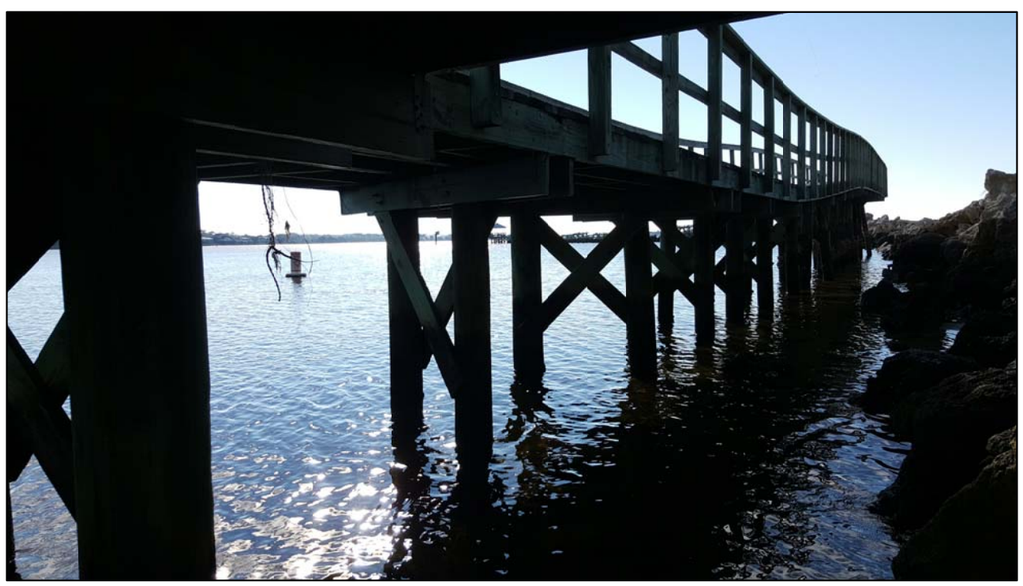

UNDERSIDE OF DISLODGED SECTION OF PIER

CONTRACTOR SHALL MATCH EXISTING PIER ALIGNMENT.

INSIDE PILING

TURNING POINT OF PIER ENTRANCE

INSIDE PILING OF MAIN PIER AT TURNING POINT TO REMAIN. REMOVE AND REPLACE REMAINING DECKING, HANDRAIL, PILINGS, AND BENTS OF MAIN PIER STRUCTURE.

PROJECT NO. 2017-001-ENG
SHEET NO. 4 OF 14

DESIGNED BY KRD
DRAWN BY KRD
CHECKED BY V. BLANCO
APPROVED BY BOCC

PROJECT NAME HODGES PARK PIER RECONSTRUCTION
SHEET TITLE EXISTING CONDITIONS
DATE 3/28/17
SCALE NTS

TAYLOR COUNTY ENGINEERING DIVISION
BOARD OF COUNTY COMMISSIONERS
201 E. GREEN STREET PERRY, FL. 32347
PH: (850) 838-3500 FAX: (850) 838-3501
E-MAIL: county.engineer@taylorcountygov.com

1" 0 VERIFY SCALE

SEAL KENNETH R. DUDLEY 58014

DATE | REVISION

FILE NAME 2017_PIER.DWG
PLOT DATE 3/28/2017 1:41 PM

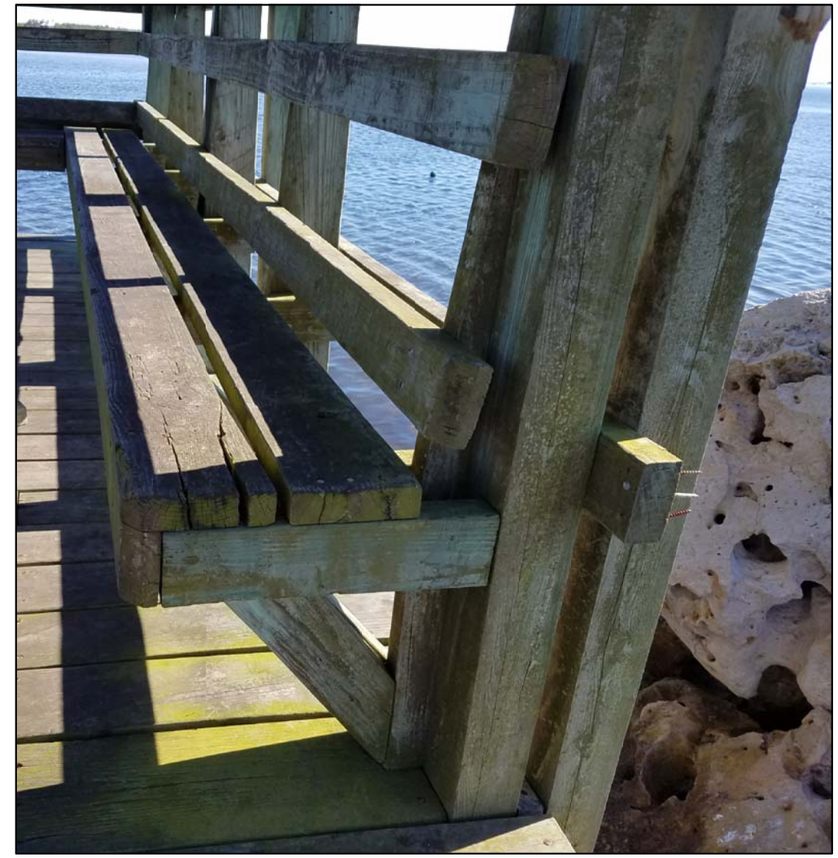

REMAINS OF COVERED PAVILION

NOTES:

1. COVERED PAVILION PILINGS/BRACING/DECKING/ROOFING/ETC. TO BE REMOVED AND LAWFULLY DISPOSED OF BY CONTRACTOR. CONTRACTOR SHALL TAKE CARE TO LAWFULLY DISPOSE OF REMOVED/REPLACED ITEMS. RETRIEVE ALL ITEMS THAT FALL INTO THE WATER.

2. NEW PAVILION TO BE CONSTRUCTED AT ORIGINAL ELEVATION, ORIENTATION & LOCATION IN ACCORDANCE WITH THESE PLANS AND SPECIFICATIONS.. ALL WOOD MEMBERS, HARDWARE/CONNECTORS, ROOFING, ETC. ARE TO BE REPLACED WITH NEW UNUSED MATERIALS.

TAYLOR COUNTY ENGINEERING DIVISION
BOARD OF COUNTY COMMISSIONERS
201 E. GREEN STREET PERRY, FL. 32347
PH: (850) 838-3500 FAX: (850) 838-3501
E-MAIL: county.engineer@taylorcountygov.com

0 1" VERIFY SCALE

DESIGNED BY	KRD
DRAWN BY	KRD
CHECKED BY	V. BLANCO
APPROVED BY	BOCC
PROJECT NAME	HODGES PARK PIER RECONSTRUCTION
SHEET TITLE	EXISTING CONDITIONS
DATE	3/28/17
SCALE	NTS
PROJECT NO.	2017-001-ENG
SHEET NO.	5
	SHEET 5 OF 14

SEAL KENNETH R. DUDLEY 58014

DATE	REVISION

FILE NAME 2017_PIER.DWG

PLOT DATE 3/28/2017 1:42 PM

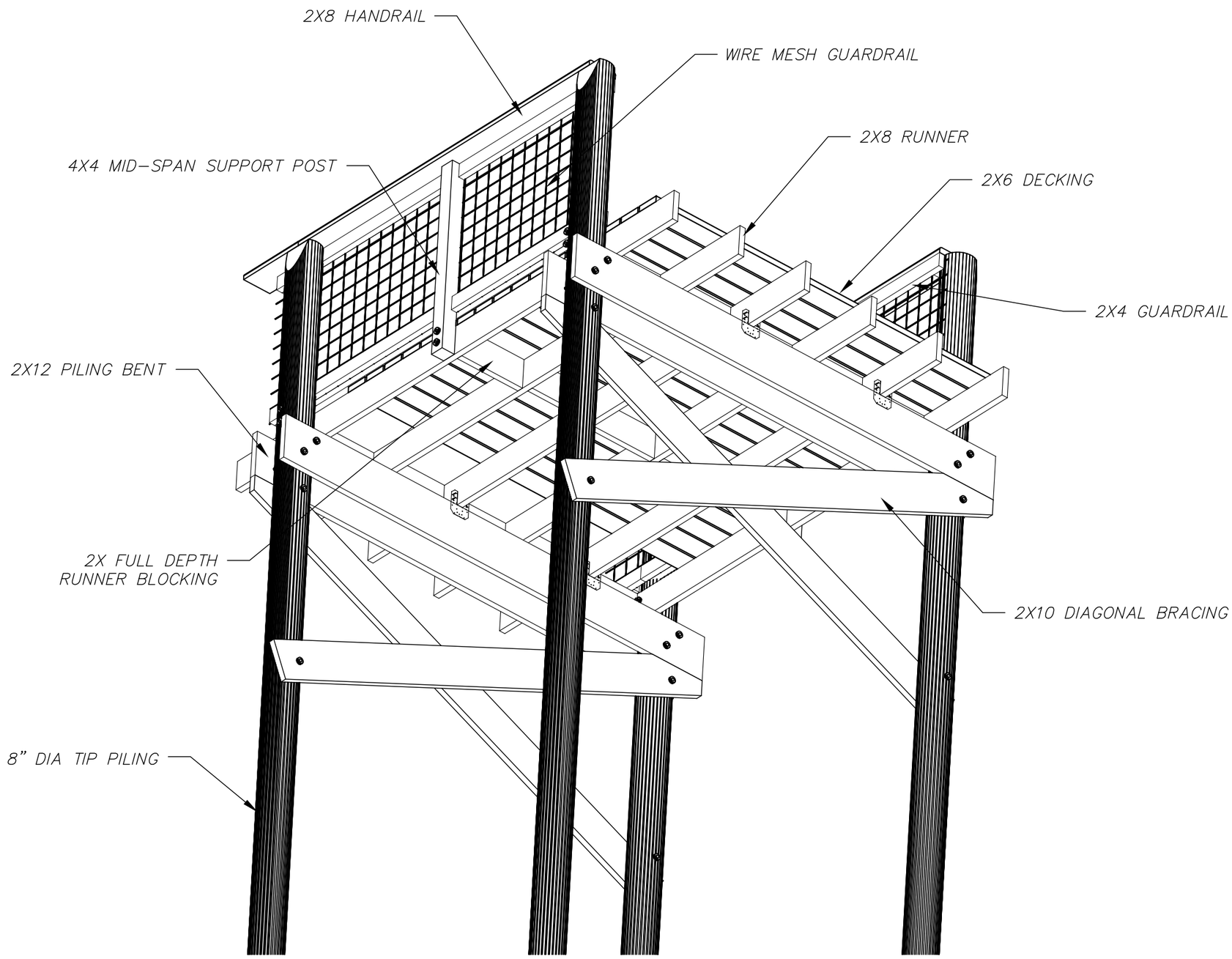

DESIGNED BY	KRD
DRAWN BY	KRD
CHECKED BY	V. BLANCO
APPROVED BY	BOCC
PROJECT NAME	HODGES PARK PIER RECONSTRUCTION
SHEET TITLE	PIER ISOMETRIC VIEW
DATE	3/28/17
SCALE	NTS
PROJECT NO.	2017-001-ENG
SHEET NO.	6
	SHEET 6 OF 14

TAYLOR COUNTY ENGINEERING DIVISION
BOARD OF COUNTY COMMISSIONERS
201 E. GREEN STREET PERRY, FL. 32347
PH: (850) 838-3500 FAX: (850) 838-3501
E-MAIL: county.engineer@taylorcountygov.com

1" 0 VERIFY SCALE

SEAL
KENNETH R. DUDLEY
58014

DATE	REVISION

FILE NAME 2017_PIER.DWG
PLOT DATE 3/28/2017 1:46 PM

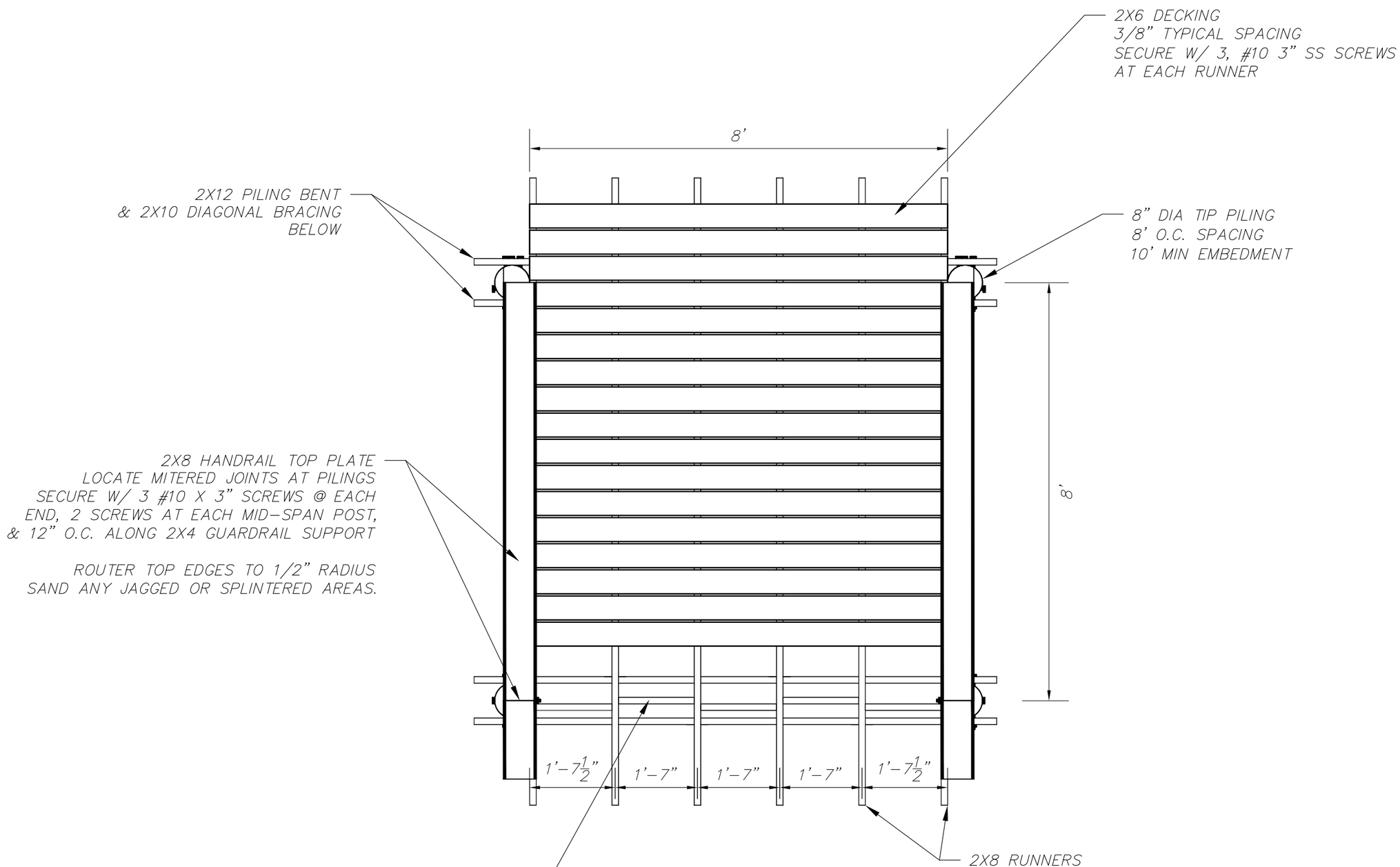

PROJECT NO. 2017-001-ENG

SHEET NO. 7 OF 14

SHEET TITLE: PIER PLAN VIEW

PROJECT NAME: HODGES PARK PIER RECONSTRUCTION

DESIGNED BY: KRD
DRAWN BY: KRD
CHECKED BY: V. BLANCO
APPROVED BY: BOCC
DATE: 3/28/17
SCALE: NTS

TAYLOR COUNTY ENGINEERING DIVISION
BOARD OF COUNTY COMMISSIONERS
201 E. GREEN STREET PERRY, FL. 32347
PH: (850) 838-3500 FAX: (850) 838-3501
E-MAIL: county.engineer@taylorcountygov.com

0 1" VERIFY SCALE

SEAL: KENNETH R. DUDLEY 58014

REVISION

DATE

PLOT DATE: 3/28/2017 1:46 PM

FILE NAME: 2017_PIER.DWG

2X4 GUARDRAIL SECURE WITH 2 #10 X 3" SS SCREWS AT EACH PILING AND MID-SPAN POST

WELDED WIRE MESH GUARDRAIL

SPLICING SHALL BE LOCATED AT PILINGS AND SECURED ITS FULL HEIGHT AT 4" O.C.

INSTALL 2X4 AT ALL SPLICE LOCATIONS AT INSIDE FACE BETWEEN TOP AND BOTTOM 2X4 GUARDRAIL

2X8 RUNNERS

SECURE EXTERIOR RUNNERS DIRECTLY TO PILINGS W/ 2 – 1/2" SS THRU BOLT, WASHERS & NUT.

INTERIOR RUNNERS SECURED AT EACH BENT W/ 2 SS #10 3" SCREWS TOE-NAILED AND SIMPSON H10ASS CONNECTOR USING SSNA10 SS NAILS

ONLY 1 CONNECTOR PER RUNNER REQUIRED AT EACH BENT LOCATION, ALTERNATING SIDES

2X6 DECKING

2X12 PILING BENT @ EACH SIDE OF PILING SECURE WITH 2 – 3/4" SS THRU BOLT, WASHERS & NUT AT EACH PILING

2X10 BRACING SECURE WITH 2 SS #10 3" SCREWS & 3/4" SS THRU BOLT, WASHERS & NUT AT EACH END

8" DIA TIP PILING 8' O.C. SPACING 10' MIN EMBEDMENT

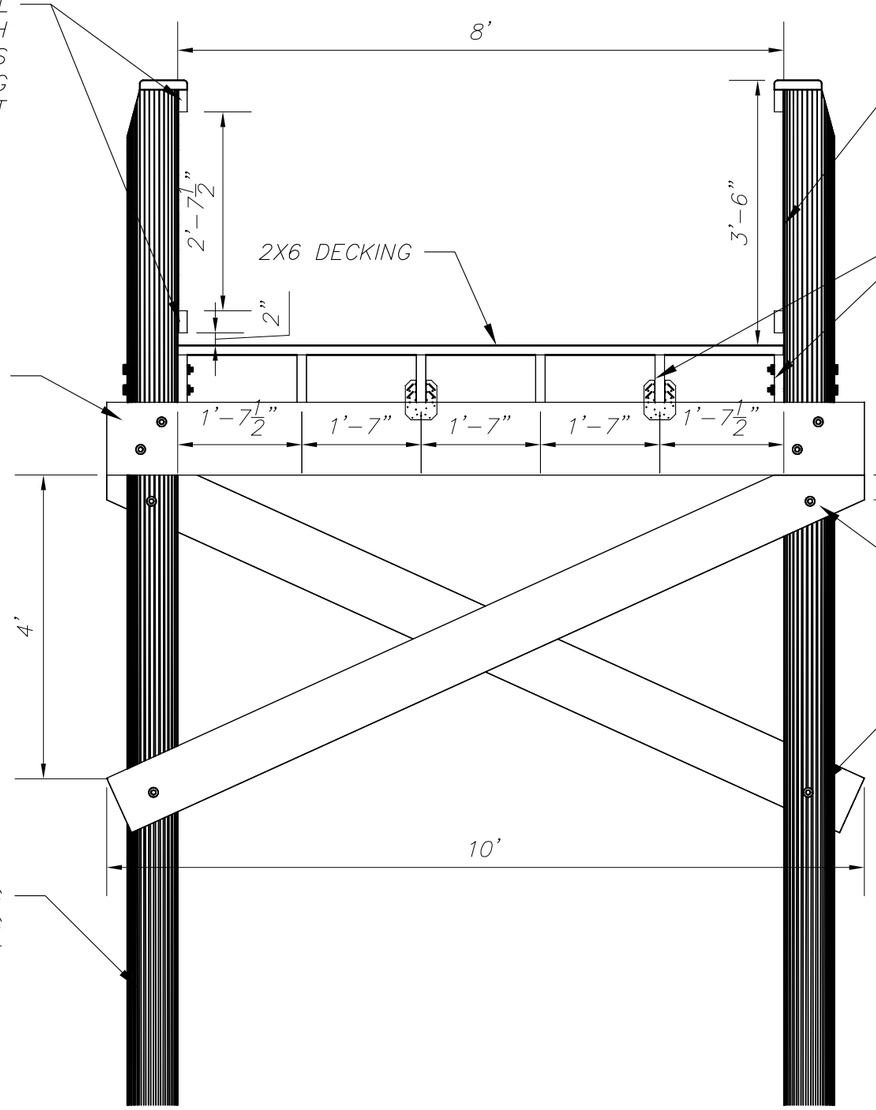

4X4 HANDRAIL MID-SPAN SUPPORT POST SECURE W/ 2 –1/2" THRU BOLT, WASHERS & NUT

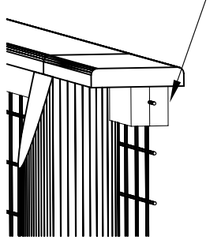

FROM OUTSIDE FACE, SECURE WIRE MESH GUARDRAIL USING 1.25" GALVANIZED STAPLES TO INSIDE 2X4 AT 12" O.C. AND VERTICALLY AT EACH PILING AND MID-SPAN SUPPORT POST AT 6" O.C., MAX

ALTERNATING FACES, SECURE INNER 2X4 GUARDRAIL TO OUTER 2X4 GUARDRAIL USING SS #10 3" SCREWS AT 12" O.C INSTALL 2 SCREWS AT EACH END OF OUTER 2X4.

ANGLE FASTENERS SLIGHTLY TO AVOID PROTRUSIONS

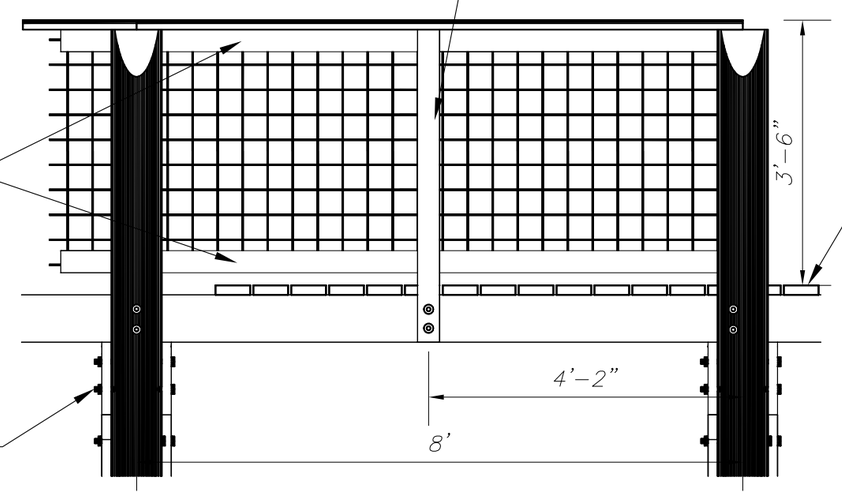

2X6 DECKING

2X12 PILING BENT @ EACH SIDE OF PILING SECURE WITH 2 – 3/4" SS OR HDG THRU BOLT, WASHERS & NUT AT EACH PILING

PROJECT NO. 2017-001-ENG

SHEET NO. 8 OF 14

PROJECT NAME HODGES PARK PIER RECONSTRUCTION

SHEET TITLE PIER SECTION VIEW

DATE 3/28/17

SCALE NTS

DESIGNED BY KRD

DRAWN BY KRD

CHECKED BY V. BLANCO

APPROVED BY BOCC

TAYLOR COUNTY ENGINEERING DIVISION

BOARD OF COUNTY COMMISSIONERS

201 E. GREEN STREET PERRY, FL. 32347

PH: (850) 838-3500 FAX: (850) 838-3501

E-MAIL: county.engineer@taylorcountygov.com

1" 0 VERIFY SCALE

SEAL KENNETH R. DUDLEY 58014

PLOT DATE 3/28/2017 1:52 PM

FILE NAME 2017_PIER.DWG

REVISION

DATE

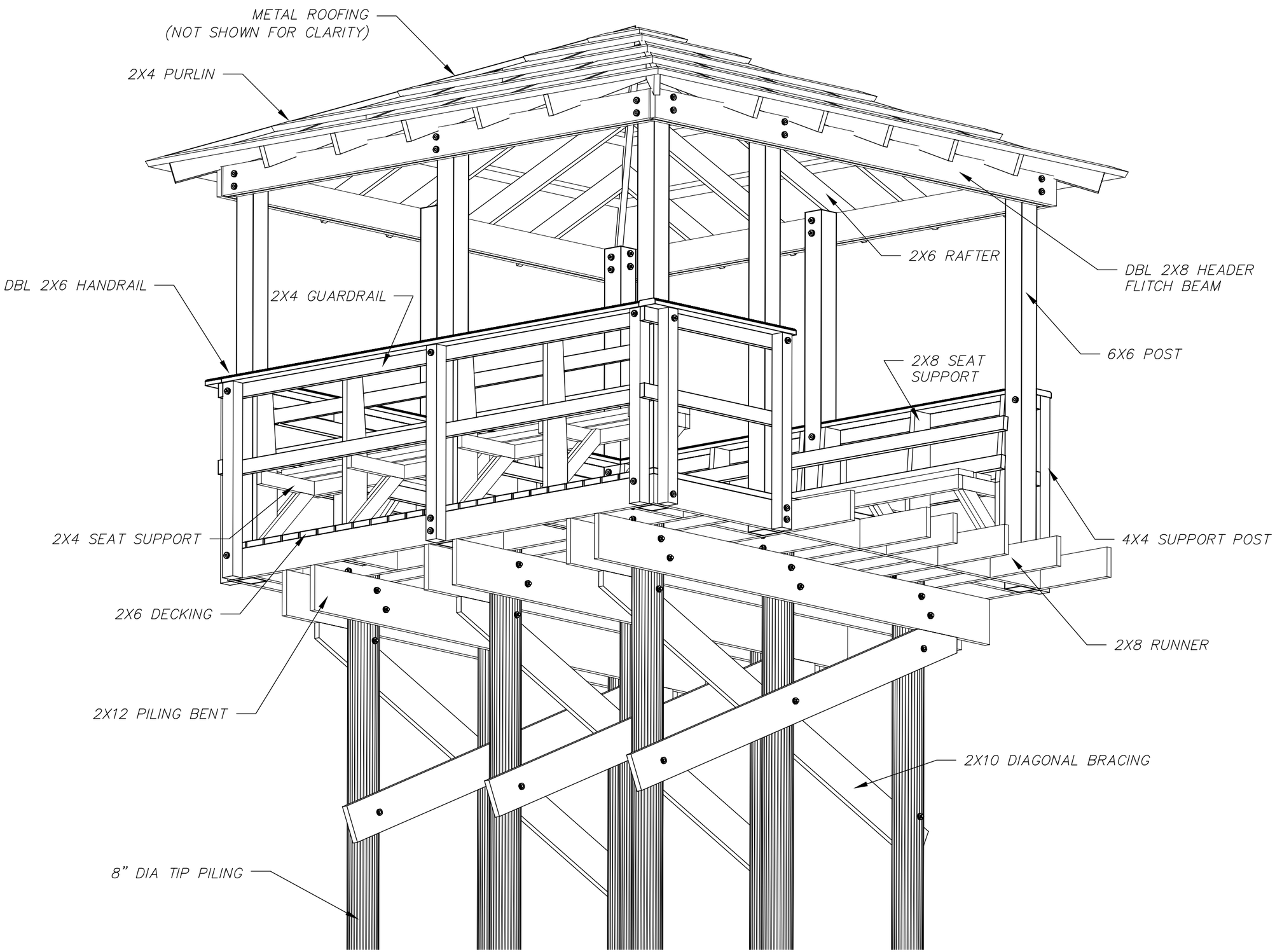

PROJECT NO. 2017-001-ENG

SHEET NO. 9 OF 14

SHEET 9

PROJECT NAME HODGES PARK PIER RECONSTRUCTION

SHEET TITLE PLATFORM ISOMETRIC VIEW

DATE 3/28/17

SCALE NTS

DESIGNED BY KRD

DRAWN BY KRD

CHECKED BY V. BLANCO

APPROVED BY BOCC

TAYLOR COUNTY ENGINEERING DIVISION

BOARD OF COUNTY COMMISSIONERS

201 E. GREEN STREET PERRY, FL. 32347

PH: (850) 838-3500 FAX: (850) 838-3501

E-MAIL: county.engineer@taylorcountygov.com

1" 0 VERIFY SCALE

SEAL KENNETH R. DUDLEY 58014

REVISION

DATE

PLOT DATE 3/28/2017 1:52 PM

FILE NAME 2017_PIER.DWG

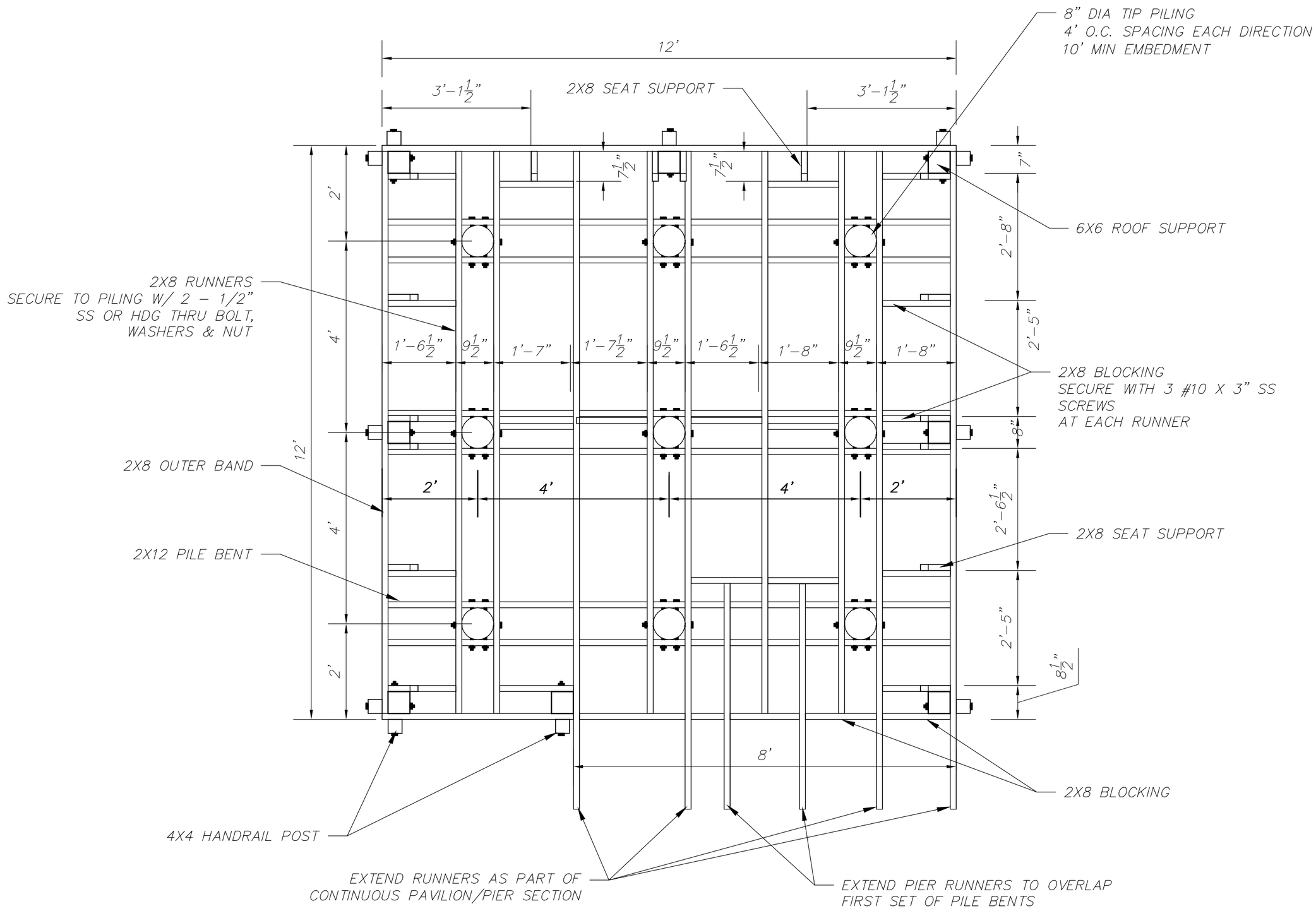

PROJECT NO. 2017-001-ENG

SHEET NO. 10 SHEET 10 OF 14

PROJECT NAME HODGES PARK PIER RECONSTRUCTION

SHEET TITLE PAVILION FLOOR FRAMING

DATE 3/28/17

SCALE NTS

DESIGNED BY KRD

DRAWN BY KRD

CHECKED BY V. BLANCO

APPROVED BY BOCC

TAYLOR COUNTY ENGINEERING DIVISION

BOARD OF COUNTY COMMISSIONERS

201 E. GREEN STREET PERRY, FL. 32347
PH: (850) 838-3500 FAX: (850) 838-3501
E-MAIL: county.engineer@taylorcountygov.com

1" 0 VERIFY SCALE

SEAL KENNETH R. DUDLEY 58014

REVISION

DATE

PLOT DATE 3/28/2017 1:53 PM

FILE NAME 2017_PIER.DWG

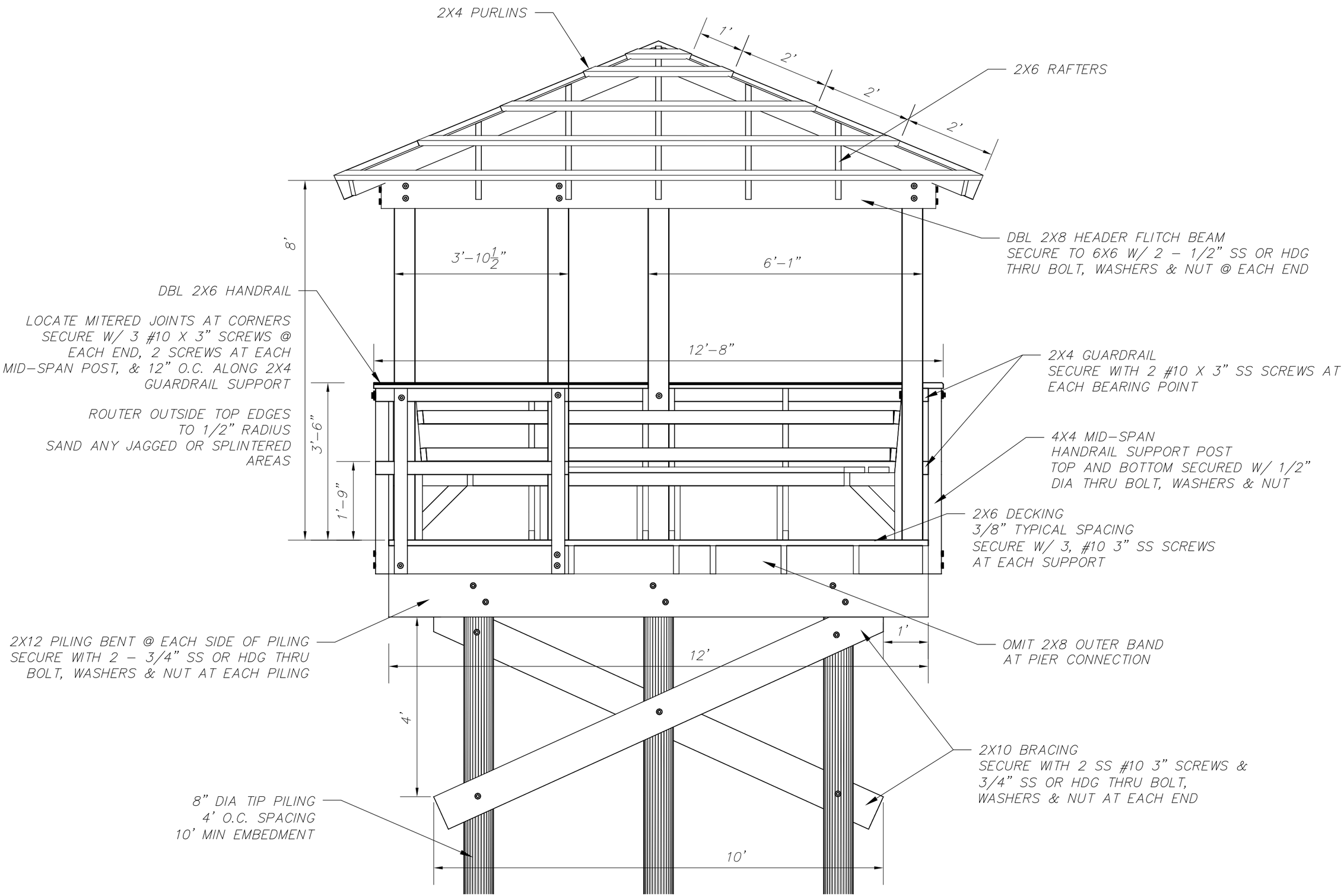

PROJECT NO. 2017-001-ENG

SHEET NO. 11

SHEET 11 OF 14

PROJECT NAME: HODGES PARK PIER RECONSTRUCTION

SHEET TITLE: PAVILION SECTION VIEW

DATE: 3/28/17

SCALE: NTS

DESIGNED BY: KRD

DRAWN BY: KRD

CHECKED BY: V. BLANCO

APPROVED BY: BOCC

TAYLOR COUNTY ENGINEERING DIVISION

BOARD OF COUNTY COMMISSIONERS

201 E. GREEN STREET PERRY, FL. 32347
PH: (850) 838-3500 FAX: (850) 838-3501
E-MAIL: county.engineer@taylorcountygov.com

1" 0 VERIFY SCALE

SEAL KENNETH R. DUDLEY 58014

REVISION

DATE

PLOT DATE 3/28/2017 2:35 PM

FILE NAME 2017_PIER.DWG

ROOF CONSISTS OF:

5:12 PITCH W/ 1 FT EAVE

26 GA. HAWAIIAN BLUE GALVALUME TUFF-RIB 36" COVERAGE METAL ROOFING PANELS

SECURE W/ ZAC SCREWS PER MANUFACTURERS SPEC'S

PROVIDE 3" OVERHANG AT EAVE

ROOFING TO INCLUDE MATCHING RC-2 RIDGE CAP AT EACH HIP AND TOP.

USE PEAL AND SEAL CLOSURE TAPE AT HIP AND BUTYL TAPE AT PANEL OVERLAPS.

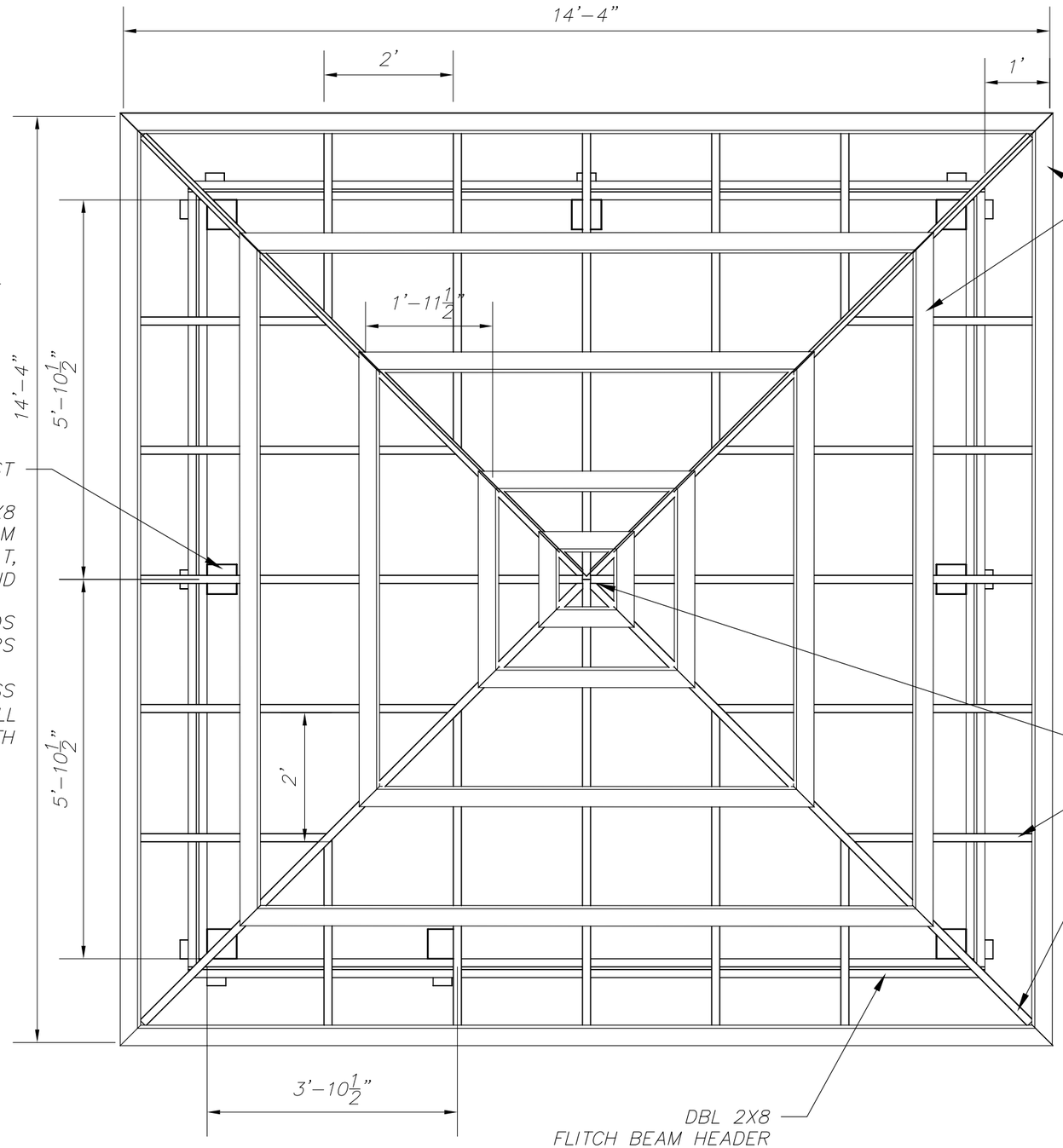

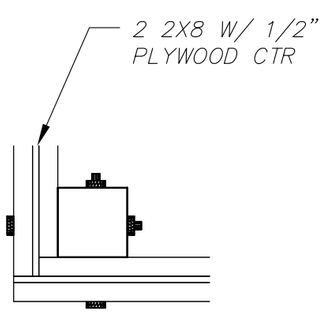

FLITCH BEAM HEADER DETAIL

PROJECT NO.	2017-001-ENG
PROJECT NAME	HODGES PARK PIER RECONSTRUCTION
SHEET NO.	12
SHEET 12 OF 14	
SHEET TITLE	PAVILION ROOF PLAN
DESIGNED BY	KRD
DRAWN BY	KRD
CHECKED BY	V. BLANCO
APPROVED BY	BOCC
DATE	3/28/17
SCALE	NTS

TAYLOR COUNTY ENGINEERING DIVISION
BOARD OF COUNTY COMMISSIONERS
201 E. GREEN STREET PERRY, FL. 32347
PH: (850) 838-3500 FAX: (850) 838-3501
E-MAIL: county.engineer@taylorcountygov.com

1" 0 VERIFY SCALE

SEAL KENNETH R. DUDLEY 58014

DATE	REVISION

PLOT DATE 3/28/2017 1:53 PM

FILE NAME 2017_PIER.DWG

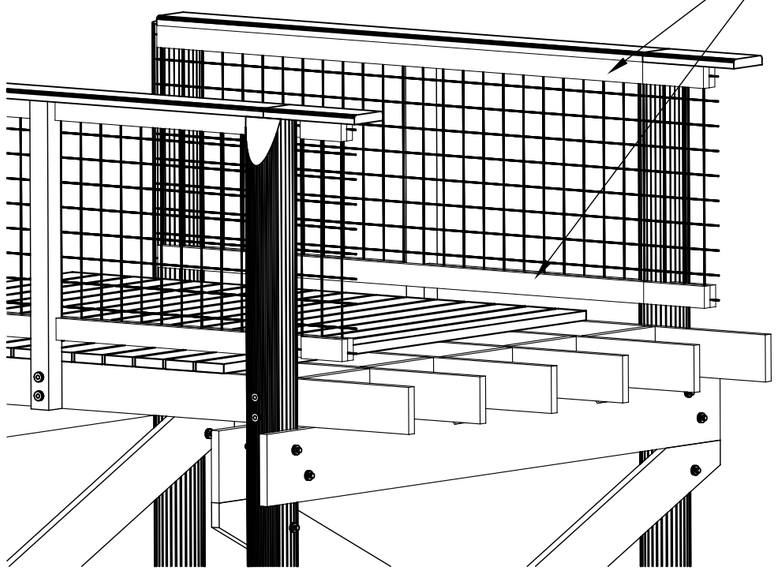

FROM OUTSIDE FACE, SECURE WIRE MESH GUARDRAIL USING 1.25" GALVANIZED STAPLES TO INSIDE 2X4 AT 12" O.C. AND VERTICALLY AT EACH PILING AND MID-SPAN SUPPORT POST AT 6" O.C., MAX

ALTERNATING FACES, SECURE INNER 2X4 GUARDRAIL TO OUTER 2X4 GUARDRAIL USING SS #10 3" SCREWS AT 12" O.C INSTALL 2 SCREWS AT EACH END OF OUTER 2X4.

ANGLE FASTENERS SLIGHTLY TO AVOID PROTRUSIONS.

SPLICING SHALL BE LOCATED ONLY AT PILING WHEN NECESSARY AND SECURED ALONG FULL HEIGHT AT 4" O.C.

INSTALL 2X4 AT ALL SPLICE LOCATIONS AT INSIDE FACE BETWEEN TOP AND BOTTOM 2X4 GUARDRAIL

WIRE MESH DETAIL

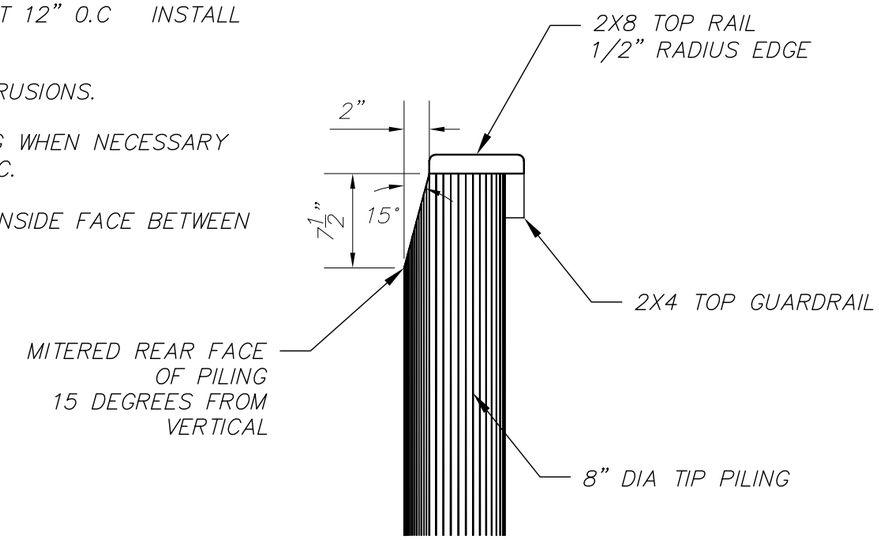

PIER PILING DETAIL

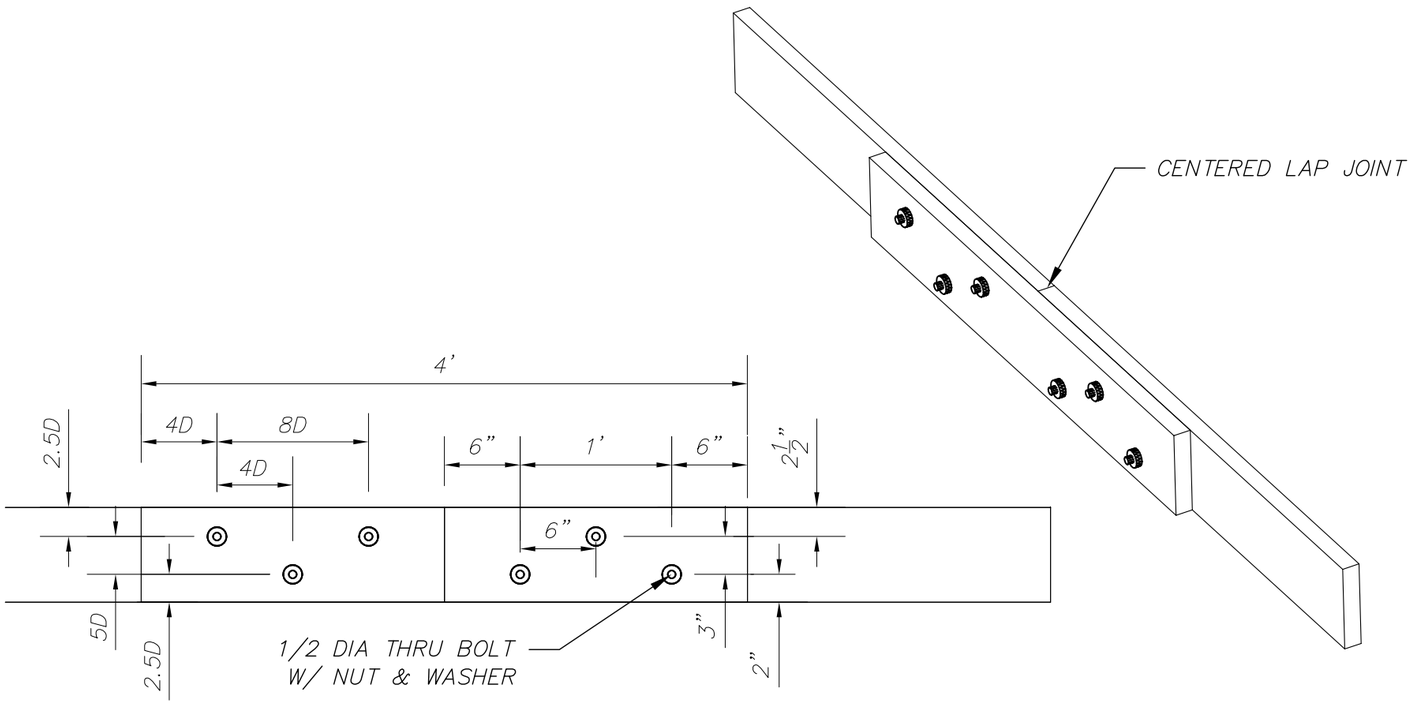

RUNNER SPLICING DETAIL

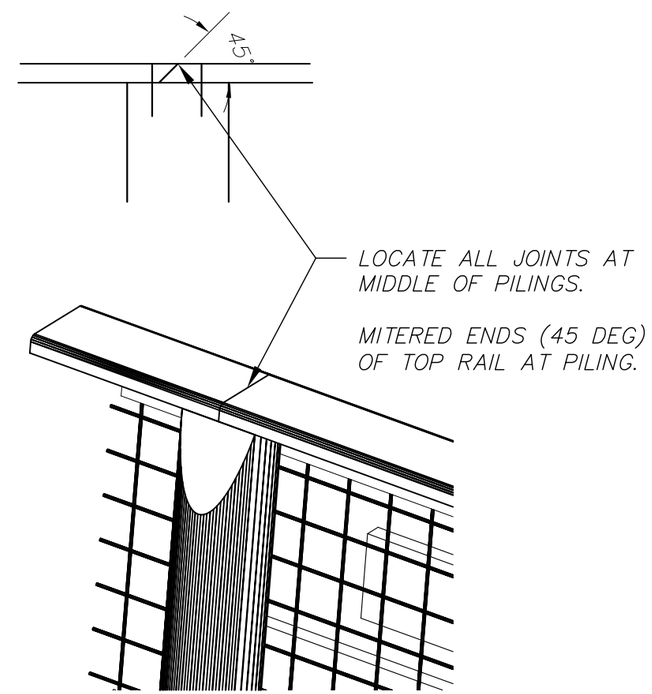

TOP RAIL DETAIL

PROJECT NO. 2017-001-ENG

SHEET NO. 13 OF 14

PROJECT NAME HODGES PARK PIER RECONSTRUCTION

SHEET TITLE CONSTRUCTION DETAILS

DATE 3/28/17

SCALE NTS

DESIGNED BY KRD

DRAWN BY KRD

CHECKED BY V. BLANCO

APPROVED BY BOCC

TAYLOR COUNTY ENGINEERING DIVISION
BOARD OF COUNTY COMMISSIONERS
201 E. GREEN STREET PERRY, FL. 32347
PH: (850) 838-3500 FAX: (850) 838-3501
E-MAIL: county.engineer@taylorcountygov.com

1" 0 VERIFY SCALE

SEAL KENNETH R. DUDLEY 58014

REVISION

DATE

PLOT DATE 3/28/2017 1:53 PM

FILE NAME 2017_PIER.DWG

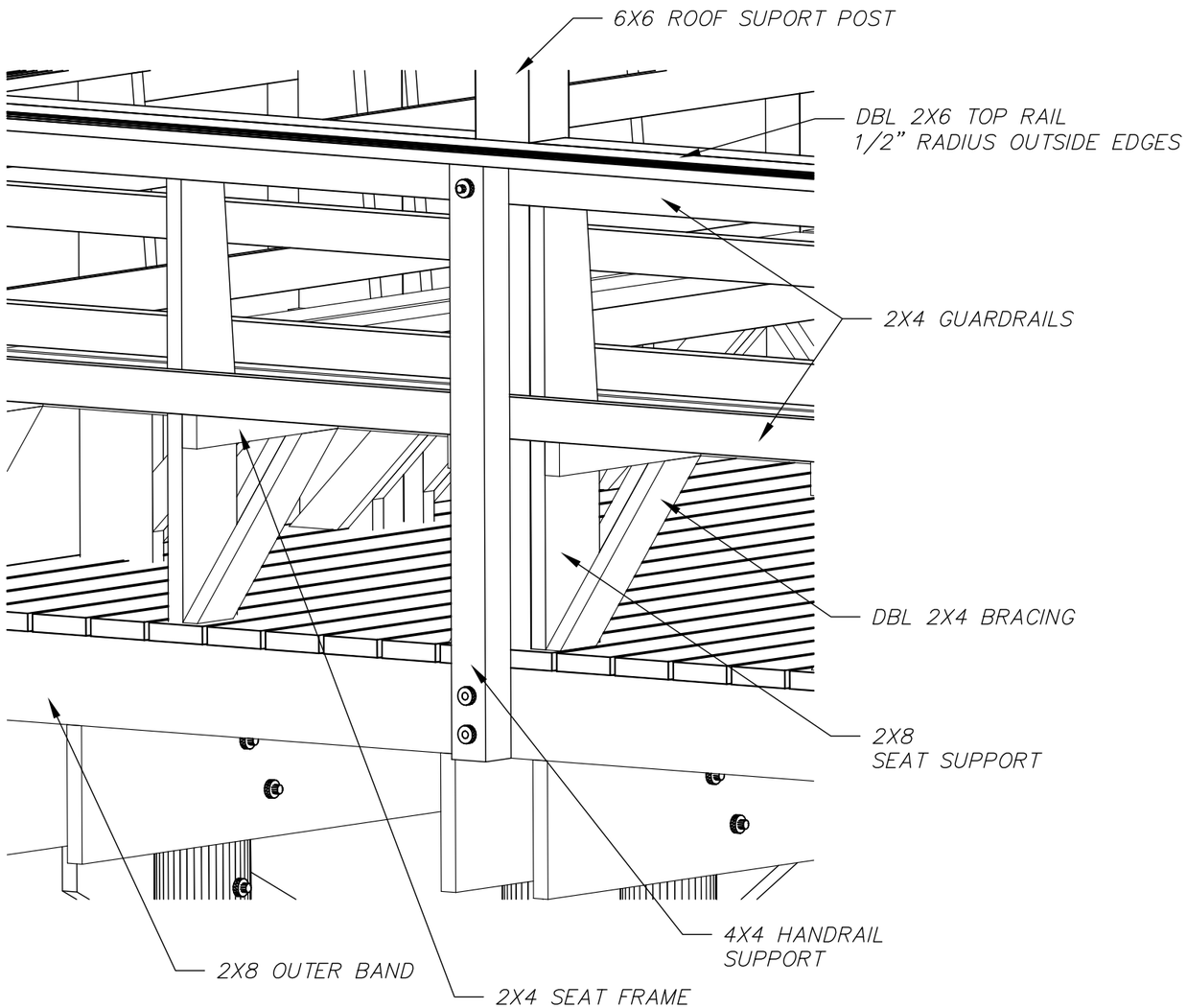

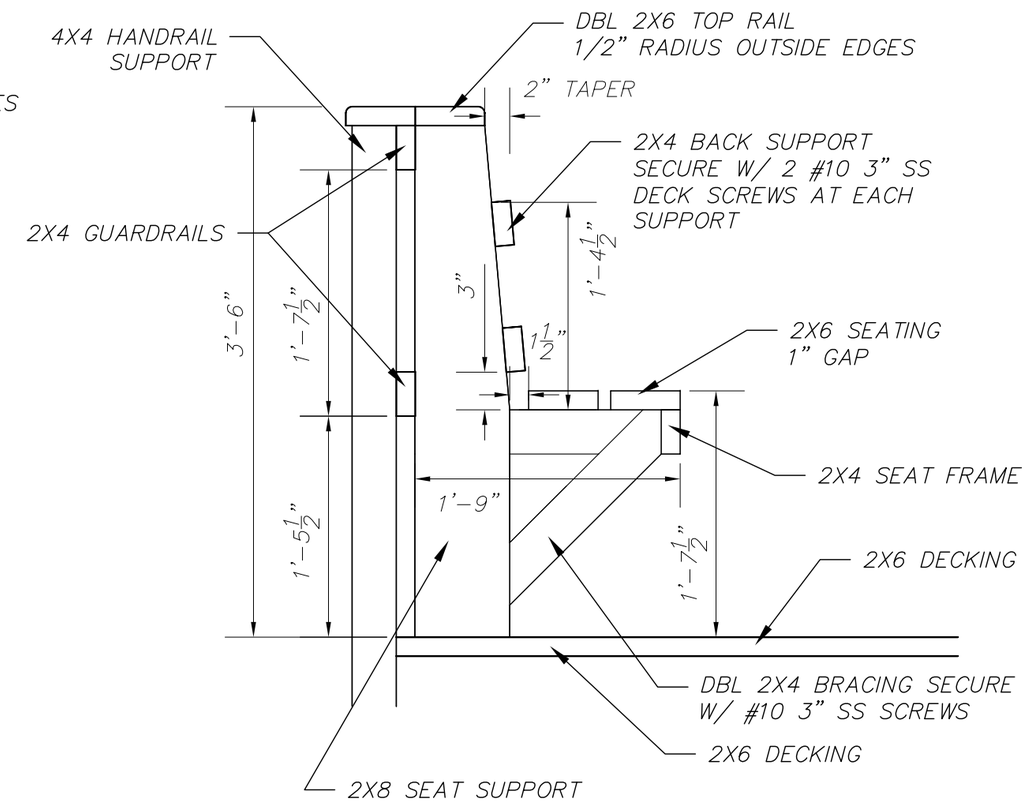

SECURE SEAT SUPPORT TO 6X6 ROOF SUPPORT POSTS USING 3 SS #10 3" SCREWS AT 12" O.C.

EXTEND MID-SPAN SUPPORTS THRU DECKING AND SECURE TO OUTER 2X8 BAND AND BLOCKING USING SS #10 3" SCREWS.

PROVIDE BLOCKING TO SUPPORT DECKING WHERE NEEDED.

SECURE SEAT FRAMING
W/ #10 3" SS SCREWS

PAVILION HANDRAIL AND SEATING DETAIL

PROJECT NO.	2017-001-ENG
PROJECT NAME	HODGES PARK PIER RECONSTRUCTION
SHEET NO.	14
SHEET TITLE	CONSTRUCTION DETAILS
SHEET 14 OF 14	
DESIGNED BY	KRD
DRAWN BY	KRD
CHECKED BY	V. BLANCO
APPROVED BY	BOCC
DATE	3/28/17
SCALE	NTS

TAYLOR COUNTY ENGINEERING DIVISION
BOARD OF COUNTY COMMISSIONERS
201 E. GREEN STREET PERRY, FL. 32347
PH: (850) 838-3500 FAX: (850) 838-3501
E-MAIL: county.engineer@taylorcountygov.com

1" 0 VERIFY SCALE

SEAL KENNETH R. DUDLEY 58014

DATE	REVISION

PLOT DATE 3/28/2017 1:54 PM

FILE NAME 2017_PIER.DWG

TAYLOR COUNTY BOARD OF COMMISSIONERS

County Commission Agenda Item

SUBJECT/TITLE:	THE BOARD TO APPROVE THE COUNTY ADMINISTRATOR SIGNATURE ON A MAINTENANCE AND SUPPORT CONTRACT FOR THE SHERIFF OFFICE LIVE SCAN FINGER PRINT MACHINE.
MEETING DATE REQUESTED:	April 3, 2017

Statement of Issue: **THE BOARD HAS APPROVE IN PAST YEARS THE SHERIFF DEPARTMENT'S LIVE SCAN FINGERPINT MACHINE SERVICE CONTRACT. THE CURRENT CONTRACT ENDS ON APRIL 30 AND THE COUNTY ADMINISTRATOR WILL EXECUTE A NEW CONTRACT WITH THE BOARDS APPROVAL.**

Recommended Action: **APPROVE**

Fiscal Impact: **$4,695**

Budgeted Expense: **YES**

Submitted By: **COUNTY ADMINISTRATOR**

Contact:

SUPPLEMENTAL MATERIAL / ISSUE ANALYSIS

History, Facts & Issues

Options:

Attachments: CONTRACT

PURCHASE REQUISITION

REQUISITION NUMBER

TAYLOR COUNTY BOARD OF COUNTY COMMISSIONERS

VENDOR: Safran MorphoTrak
ADDRESS: 5515 E. La Palma Ave., Suite 100
CITY/STATE/ZIP: Anaheim, CA 92807
PHONE: (714) 238-2000

BILL TO:
TAYLOR COUNTY BOARD OF COUNTY COMMISSIONERS
P.O. BOX 620
PERRY, FLORIDA 32348

SHIP TO: Taylor Co. Jail
589 US Hwy 27 East
Perry, FL 32347
850-584-4333

QTY.	ITEM	DESCRIPTION	UNIT	AMOUNT
1		Maintenance & Support		4,695.54
		agreement for Live Scan		
		finger print Machine		

DATE:

AUTHORIZED SIGNATURE:

DEPARTMENT			
0	2	0	0

ACCOUNT CODE				

AMOUNT							
		4	6	9	5	5	4

SAFRAN
MorphoTrak

5515 E. La Palma Ave., Suite 100
Anaheim, CA 92807
Tel: (714) 238-2000
Fax:(714) 237-0050

March 17, 2017

Lt. Eva Leverette
Taylor County Jail
108 Jefferson St.
Perry, FL 32347

RE: **Extension to Maintenance and Support Agreement # 001880-003**
LiveScan

Dear Ms. Leverette:

By means of this letter, MorphoTrak, LLC ("MorphoTrak" or "Seller") hereby extends Taylor County Jail maintenance and support agreement as referenced above. Enclosed are two (2) copies of the updated Exhibit A Description of Covered Products, Exhibit B Support Plan, Exhibit C Support Plan Options and Pricing Worksheet for the period **May 1, 2017** through **April 30, 2018**. Pursuant to Section 3.2 of the original agreement as referenced above, all terms and conditions shall remain in full force and effect.

Please indicate acceptance of this extension by signing the acceptance block below and **return two copies to my attention at MorphoTrak, LLC at 5515 E. La Palma Avenue, Suite 100, Anaheim, California 92807 or fax it to my attention at 714-237-0050 on or before April 30, 2017**. Failure to return this fully executed letter on or before April 30, 2017 will result in a lapse in maintenance, which will be subject to a 10% recertification and reimplementation fee.

If you have any questions or need further clarification, please contact me directly at (714)688-3120 or e-mail megan.mincheff.ext@morpho.com

Sincerely,

Megan Mincheff
Contracts Administration Specialist
MorphoTrak, LLC

Accepted by:

MORPHOTRAK, LLC	**TAYLOR COUNTY JAIL**
Signed by: _____	Signed by: _____
Printed Name: Walt Scott	Printed Name: _____
Title: Vice President	Title: _____
Date: _____	Date: _____

Exhibit A
DESCRIPTION OF COVERED PRODUCTS

MAINTENANCE AND SUPPORT AGREEMENT NO. **SA# 001880-003**

CUSTOMER: ***TAYLOR COUNTY JAIL***

The following table lists the Products under maintenance coverage:

Product	*Description*	*Node Name*	*Qty*
LSS-R	LiveScan with Mugshot Capture: and Mugshot Digital Camera ♦ Minitower PC with Microsoft Windows XP ♦ LCD Display with Touch Screen ♦ Fingerprint/Palmprint (500 ppi Scanner and FBI Certified) ♦ Ruggedized Cabinet ♦ Rackmount Keyboard & Mouse ♦ Lighting and Backdrop Kit ♦ Uninterruptible Power Supply ♦ LiveScan Application Software	FLTALV02	1

Exhibit B SUPPORT PLAN

This Support Plan is a Statement of Work that provides a description of the support to be performed.

1. Services Provided. The Services provided are based on the Severity Levels as defined herein. Each Severity Level defines the actions that will be taken by Seller for Response Time, Target Resolution Time, and Resolution Procedure for reported errors. Because of the urgency involved, Response Times for Severity Levels 1 and 2 are based upon voice contact by Customer, as opposed to written contact by facsimile or letter. Resolution Procedures are based upon Seller's procedures for Service as described below.

SEVERITY LEVEL	DEFINITION	RESPONSE TIME	TARGET RESOLUTION TIME
1	Total System Failure - occurs when the System is not functioning and there is no workaround; such as a Central Server is down or when the workflow of an entire agency is not functioning.	Telephone response within 1 hour of initial voice notification	Resolve within 24 hours of initial notification
2	Critical Failure - Critical process failure occurs when a crucial element in the System that does not prohibit continuance of basic operations is not functioning and there is usually no suitable work-around. Note that this may not be applicable to intermittent problems.	Telephone response within 3 Standard Business Hours of initial voice notification	Resolve within 7 Standard Business Days of initial notification
3	Non-Critical Failure - Non-Critical part or component failure occurs when a System component is not functioning, but the System is still useable for its intended purpose, or there is a reasonable workaround.	Telephone response within 6 Standard Business Hours of initial notification	Resolve within 180 days in a Seller-determined Patch or Release.
4	Inconvenience - An inconvenience occurs when System causes a minor disruption in the way tasks are performed but does not stop workflow.	Telephone response within 2 Standard Business Days of initial notification	At Seller's discretion, may be in a future Release.
5	Customer request for an enhancement to System functionality is the responsibility of Seller's Product Management.	Determined by Seller's Product Management.	If accepted by Seller's Product Management, a release date will be provided with a fee schedule, when appropriate.

1.1 Reporting a Problem. Customer shall assign an initial Severity Level for each error reported, either verbally or in writing, based upon the definitions listed above. Because of the urgency involved, Severity Level 1 or 2 problems must be reported verbally to the Seller's call intake center. Seller will notify the Customer if Seller makes any changes in Severity Level (up or down) of any Customer-reported problem.

1.2 Seller Response. Seller will use best efforts to provide Customer with a resolution within the appropriate Target Resolution Time and in accordance with the assigned Severity Level when Customer allows timely access to the System and Seller diagnostics indicate that a Residual Error is present in the Software. Target Resolution Times may not apply if an error cannot be reproduced on a regular basis on either Seller's or Customer's Systems. Should Customer report an error that Seller cannot reproduce, Seller may enable a detail error capture/logging process to monitor the System. If Seller is unable to correct the reported Residual Error within the specified Target Resolution Time, Seller will escalate its procedure and assign such personnel or designee to correct such Residual Error

promptly. Should Seller, in its sole discretion, determine that such Residual Error is not present in its Release, Seller will verify: (a) the Software operates in conformity to the System Specifications, (b) the Software is being used in a manner for which it was intended or designed, and (c) the Software is used only with approved hardware or software. The Target Resolution Time shall not commence until such time as the verification procedures are completed.

1.3 Error Correction Status Report. Seller will provide verbal status reports on Severity Level 1 and 2 Residual Errors. Written status reports on outstanding Residual Errors will be provided to System Administrator on a monthly basis.

2. Customer Responsibility.

2.1 Customer is responsible for running any installed anti-virus software.

2.2 Operating System ("OS") Upgrades. Unless otherwise stated herein, Customer is responsible for any OS upgrades to its System. Before installing any OS upgrade, Customer should contact Seller to verify that a given OS upgrade is appropriate.

3. Seller Responsibility.

3.1 Anti-virus software. At Customer's request, Seller will make every reasonable effort to test and verify specific anti-virus, anti-worm, or anti-hacker patches against a replication of Customer's application. Seller will respond to any reported problem as an escalated support call.

3.2 Customer Notifications. Seller shall provide access to (a) Field Changes; (b) Customer Alert Bulletins; and (c) hardware and firmware updates, as released and if applicable.

3.3 Account Reviews. Seller shall provide annual account reviews to include (a) service history of site; (b) downtime analysis; and (c) service trend analysis.

3.4 Remote Installation. At Customer's request, Seller will provide remote installation advice or assistance for Updates.

3.5 Software Release Compatibility. At Customer's request, Seller will provide: (a) current list of compatible hardware operating system releases, if applicable; and (b) a list of Seller's Software Supplemental or Standard Releases.

3.6 On-Site Correction. Unless otherwise stated herein, all suspected Residual Errors will be investigated and corrected from Seller's facilities. Seller shall decide whether on-site correction of any Residual Error is required and will take appropriate action.

4. Compliance to Local, County, State and/or Federal Mandated Changes. *(Applies to Software and interfaces to those Products)* Unless otherwise stated herein, compliance to local, county, state and/or federally mandated changes, including but not limited to IBR, UCR, ECARS, NCIC and state interfaces are not part of the covered Services.

(The below listed terms are applicable only when the Maintenance and Support Agreement includes Equipment which is shown on the Description of Covered Products, Exhibit A to the Maintenance and Support Agreement)

5. On-site Product Technical Support Services. Seller shall furnish labor and parts required due to normal wear to restore the Equipment to good operating condition.

5.1 Seller Response. Seller will provide telephone and on-site response to Central Site, defined as the Customer's primary data processing facility, and Remote Site, defined as any site outside the Central Site, as shown in Support Plan Options and Pricing Worksheet.

5.2 At Customer's request, Seller shall provide continuous effort to repair a reported problem beyond the PPM. Provided Customer gives Seller access to the Equipment before the end of the PPM, Seller shall extend a two (2) hour grace period beyond PPM at no charge. Following this grace period, any additional on-site labor support shall be invoiced on a time and material basis at Seller's then current rates for professional services.

8

TAYLOR COUNTY BOARD OF COMMISSIONERS

County Commission Agenda Item

SUBJECT/TITLE:	Public hearing to consider adoption of a resolution to abandon a 420-foot x 30-foot alley in Block 84, Steinhatchee Subdivision.
MEETING DATE REQUESTED:	April 3, 2017

Statement of Issue: Board to consider petition to abandon an alley located in Block 84, Steinhatchee Subdivision, between 2nd Street SE and 3rd Street SE.

Recommended Action: Hold public hearing.

Fiscal Impact: Unknown

Submitted By: Danny Griner

Contact: building.director@taylorcountygov.com

SUPPLEMENTAL MATERIAL / ISSUE ANALYSIS

History, Facts & Issues: During the March 6, 2017 Board meeting the Board voted to authorize right of way abandonment proceedings for an alley located in Block 84 of the Steinhatchee Subdivision and named Gamble Alley. Based on the Board decision, planning staff prepared and advertised the public notice and sent notices by mail to all residents within 500-feet of the petition site.

The application consists of a request to abandon a 420-foot x 30-foot alley in Block 84 of the Steinhatchee Subdivision, between Second Street SE and Third Street SE. Staff was able to utilize the legal description provided in the original application for the advertising of the public hearing; however, the application file did not contain individual legal descriptions for the portions of the right-of-way that would be deeded to each adjoining property owner. If the Board approves the abandonment of the alley, staff would need direction as to whether the individual legal descriptions should be provided by the adjoining property owners, or obtained by county staff.

Planning Staff respectfully request that the Board hold the public hearing to consider adoption of a resolution to abandon of the alley.

Options:
1. Approve the abandonment request.
2. Deny the abandonment request.

Attachments:
1. Location map showing location and approximate dimension of abandonment area.
2. Copy of resolution.

PETITION TO CLOSE AND

ABANDON ROAD

COMES NOW, The Board of County Commissioners of Taylor County, Florida and files this Petition to Close and Abandon the following road lying and being in Taylor County, Florida, being described as follows, to-wit:

A parcel of land in Section 26, Township 9 South, Range 9 East, Taylor County, Florida and being a 30 foot alley, lying and being in Block 84 of the STEINHATCHEE SUBDIVISION, as recorded in the Public Records of Taylor County, Florida in Plat Book 1, Pages 26 and 27 and being more particularly described as follows:

BEGIN AT THE SE CORNER OF LOT 2 BLOCK 84 STEINHATCHEE SUBDIVISION, TAYLOR COUNTY, FLORIDA FOR THE P.O.B.; THENCE RUN SOUTH ALONG THE EAST LINE OF BLOCK 84 AND THE WEST R/W LINE OF THIRD STREET SE TO THE NE CORNER OF LOT 3 BLOCK 84 STEINHATCHEE SUBDIVISION; THENCE RUN WEST ALONG THE NORTH LINE OF LOTS 3, 4, 5, 6, 7, 8, 9, AND 10, BLOCK 84, TO THE NW CORNER OF LOT 10 BLOCK 84 STEINHATCHEE SUBDIVISION AND THE EAST R/W LINE OF SECOND STREET SE; THENCE RUN NORTH ALONG THE WEST LINE OF BLOCK 84 AND THE EAST R/W LINE OF SECOND STREET SE TO THE SW CORNER OF LOT 11 BLOCK 84 STEINHATCHEE SUBDIVISION; THENCE RUN EAST ALONG THE SOUTH LINE OF LOT 11 AND LOT 2 BLOCK 84 STEINHATCHEE SUBDIVISION BACK TO THE P.O.B.; CONTAINING 0.26 ACRE MORE OR LESS. SUBJECT PROPERTY BEING A 30.00 FOOT ALLEY RUNNING EAST AND WEST ACROSS BLOCK 84, STEINHATCHEE SUBDIVISION.

1. This Petition is pursuant to Chapter 336.09 Florida Statutes and the petition is to vacate, abandon, discontinue and close the above-described road.

2. The Petition is also pursuant to Chapter 336.10 Florida Statutes and shall hold a public hearing and publish Notice in the newspaper one time at least two weeks prior to the date of the public hearing.

DATED this _____ day of _____, 2017.

_____

Pam Feagle, Chairperson

RESOLUTION

BE IT RESOLVED BY THE BOARD OF COUNTY COMMISSIONERS OF TAYLOR COUNTY, FLORIDA:

1. That, pursuant to the Notice of Proceedings for Closing of Streets duly published according to law, proof of publication of which is attached hereto and made a part hereof, a hearing was duly held at 6:00 o'clock p.m. on the 3rd day of April, A.D. 2017, to consider and determine whether or not the County would vacate, abandon, discontinue, and close certain roads in Taylor County, Florida, more particularly described in the proof of publication attached hereto. At the time and place set for said hearing, all persons interested were given the opportunity to be heard. The Board of County Commissioners of Taylor County, Florida, determined that the proposed action of vacating, abandoning, discontinuing, and closing certain roads herein more particularly described will not deprive any person of a reasonable means of ingress and egress to his premises and will not materially interfere with the County's road system.

2. That, the certain roads herein described be, and the same is hereby, vacated, abandoned, and discontinued and the Board of County Commissioners hereby renounces and disclaims any right of the County and public in and to any land or interest therein contained in the certain roads in Taylor County, Florida, more particularly described as:

DESCRIPTION

A parcel of land in Section 26, Township 9 South, Range 9 East, Taylor County, Florida and being a 30 foot alley, lying and being in Block 84 of the STEINHATCHEE SUBDIVISION, as recorded in the Public Records of Taylor County, Florida in Plat Book 1, Pages 26 and 27 and being more particularly described as follows:

BEGIN AT THE SE CORNER OF LOT 2 BLOCK 84 STEINHATCHEE SUBDIVISION, TAYLOR COUNTY, FLORIDA FOR THE P.O.B.; THENCE RUN SOUTH ALONG THE EAST LINE OF BLOCK 84 AND THE WEST R/W LINE OF THIRD STREET SE TO THE NE CORNER OF LOT 3 BLOCK 84 STEINHATCHEE

SUBDIVISION; THENCE RUN WEST ALONG THE NORTH LINE OF LOTS 3, 4, 5, 6, 7, 8, 9, AND 10, BLOCK 84, TO THE NW CORNER OF LOT 10 BLOCK 84 STEINHATCHEE SUBDIVISION AND THE EAST R/W LINE OF SECOND STREET SE; THENCE RUN NORTH ALONG THE WEST LINE OF BLOCK 84 AND THE EAST R/W LINE OF SECOND STREET SE TO THE SW CORNER OF LOT 11 BLOCK 84 STEINHATCHEE SUBDIVISION; THENCE RUN EAST ALONG THE SOUTH LINE OF LOT 11 AND LOT 2 BLOCK 84 STEINHATCHEE SUBDIVISION BACK TO THE P.O.B.; CONTAINING 0.26 ACRE MORE OR LESS. SUBJECT PROPERTY BEING A 30.00 FOOT ALLEY RUNNING EAST AND WEST ACROSS BLOCK 84, STEINHATCHEE SUBDIVISION.

3. This resolution shall take effect when the original hereof, together with a copy of the proof of publication of the adopted Resolution, has been filed with the Clerk of the Circuit Court for recording in the Public Records of Taylor County, Florida.

DULY ADOPTED in regular session, this 3rd day of April, A.D., 2017.

BOARD OF COUNTY COMMISSIONERS
TAYLOR COUNTY, FLORIDA

(Seal) By: _____
Pam Feagle, Chairperson

ATTEST:

_____
Annie Mae Murphy, Clerk

APPROVED AS TO FORM

_____
Conrad C. Bishop, Jr, County Attorney

PERRY NEWS-HERALD/TACO TIMES
Published Weekly in the City of Perry
County of Taylor, State of Florida
AFFIDAVIT OF PUBLICATION

Before me, the undersigned authority personally appeared DONALD D. LINCOLN, who on oath says that he is the PUBLISHER of the Perry News-Herald/ Taco Times, both weekly newspapers published in Perry, Taylor County, Florida, that the attached copy of advertisement in re:

Gamble Alley Road Closing

was published in said newspaper in the issues of:

March 15, 2017

Affiant says further that the said, newspapers published at Perry in said Taylor County, Florida, each week; has been entered as second class mail matter at the Post Office in Perry, Florida, in said Taylor County, Florida for a period of one year next proceeding the first publication of the attached copy of notice to appear; and affiant further says that he has neither paid nor promised any person, firm or corporation any discount, rebate, commission or refund for the purpose of securing this advertisement for publication in said newspaper.

Donald D. Lincoln, Publisher

Sworn to and subscribed
before me this

March 15, 2017

Debra M. Poppell

Notary Public
County of Taylor
State of Florida
Personally Known
Personally Appeared
before me

DEBRA M. POPPELL
MY COMMISSION # FF 240985
EXPIRES: August 13, 2019
Bonded Thru Notary Public Underwriters

Original to Clerk

NOTICE OF PROCEDURES FOR THE CLOSING OF STREETS, THOROUGHFARES AND ALLEYS

TO WHOM IT MAY CONCERN:
You will take notice that the Board of County Commissioners of Taylor County, Florida, upon the petition of certain of the adjacent landowners to hereinafter described property, will at 6:00 p.m. on the 3rd day of April, 2017, at the Taylor County Administrative Complex, 201 East Green Street, Perry, Florida, 32347, consider and determine whether the County will vacate, abandon, close and will renounce and disclaim any and all right of the County and public in and to all street, thoroughfares and alleys which run over, upon or through the following described lots, blocks, pieces or parcels of land, lying and being in Taylor County, Florida, and described as follows:
Begin at the SE corner of Lot 2 Block 84 Steinhatchee Subdivision Taylor County, Florida for the P.O.B., thence run South along the East line of Block 84 and THE WEST R/W LINE OF THIRD STREET SE TO THE NE CORNER OF LOT 3 BLOCK 84 STEINHATCHEE SUBDIVISION; THENCE RUN WEST ALONG THE NORTH LINE OF LOTS 3, 4, 5, 6, 7, 8, 9, AND 10, BLOCK 84, TO THE NW CORNER OF LOT 10 BLOCK 84 steinhatchee subdivision AND the EAST R/W LINE OF SECOND STREET SE; THENCE RUN NORTH ALONG THE WEST LINE OF BLOCK 84 AND THE EAST R/W LINE OF SECOND STREET SE TO THE SW CORNER OF LOT 11 BLOCK 84 STEINHATCHEE SUBDIVISION, THENCE RUN EAST ALONG THE SOUTH LINE OF LOT 11 AND LOT 2 BLOCK 84 STEINHATCHEE SUBDIVISION BACK TO THE P.O.B.; CONTAINING 0.26 ACRE MORE OR LESS. SUBJECT PROPERTY BEING A 30.00 FOOT ALLEY RUNNING EAST AND WEST ACROSS BLOCK 84, STEINHATCHEE SUBDIVISION.
A copy of the petition is available to the public at the Planning Department of Taylor County during regular business hours.
Notice is also given pursuant to Florida Statute 286.105, that any persons deciding to appeal any matter considered at this public hearing will need a record of the meeting and may need to ensure that a verbatim record of the proceedings is made, which record includes the testimony and evidence upon which the appeal is to be based.
This hearing may be continued from time to time as may be necessary.
This Notice shall be mailed to property owners within 500 feet of the property directly affected and whose address is known by reference to the latest approved ad valorem tax roll.
Dated this 15th day of March, 2017
3/15

Boat Ramp
Alley Location
SECOND ST E
FIRST ST E
CENTRAL AVE
1ST AVE S
3RD ST E
2ND ST E
1ST ST E
WESTWIND WAY
51

9

TAYLOR COUNTY BOARD OF COMMISSIONERS	
County Commission Agenda Item	
SUBJECT/TITLE:	THE BOARD TO CONSIDER ASSIGNING THE ATTORNEY TO AMEND EXISTING ORDINANCE SECTION 320 OF THE DEVELOPMENT AUTHORITY BOARD MEMBERSHIP FROM SEVEN MEMBERS TO NINE MEMBERS.
MEETING DATE REQUESTED:	APRIL 3, 2017

Statement of Issue: **THE TCDA REQUEST THAT THEIR BOARD MEMBERSHIP NUMBERS BE INCREASED FROM SEVEN MEMBERS, INCLUDING THE EX OFFICIO MEMBERS, TO NINE MEMBERS TO BETTER ENABLE MEETINGS TO HAVE A FOUR MEMBER QUORUM AS REQUIRED BY ORDINANCE.**

Recommended Action: **ASSIGN TO ATTORNEY**

Fiscal Impact: **ADDITIONAL TRAVEL EXPENSE (POTENTIAL)**

Budgeted Expense: **NO**

Submitted By: **RANDY NEWMAN, TCDA CHAIRMAN**

Contact:

SUPPLEMENTAL MATERIAL / ISSUE ANALYSIS

History, Facts & Issues: **County Ordinance Sec. 320. - The authority shall be composed of seven members. The chairman of the board of county commissioners of the county and the president of the city council of Perry shall be ex officio members. Each of the other five members shall be a freeholder and a qualified elector of the county. Members of the authority, exclusive of the ex officio members, shall be appointed by the board of county commissioners of said county. The five appointed members shall serve for two-year terms and in the event of a vacancy in the appointed members said vacancy shall be filled by appointment by the board of county commissioners. The said five appointive members shall be from the county at large rather than [the] district, and may succeed themselves in office.**

Options:

Attachments:

10

TAYLOR COUNTY BOARD OF COMMISSIONERS

County Commission Agenda Item

SUBJECT/TITLE:	THE BOARD TO REVIEW AND APPROVE A RESOLUTION BY THE BOARD REQUESTING THE FLORIDA DEPARTMENT OF TRANSPORTATION CONTINUE THE PROCESS OF TRANSFERING A SECTION OF STATE ROUTE 55, ALSO KNOWN AS U.S. ROUTE 221 FROM THE CITY LIMITS OF PERRY TO THE INTERSECTION OF COUNTY ROAD 359, ALSO KNOWN AS WRIGHT ROAD, AND SUBSEQUENTLY TRANSFER COUNTY ROAD 359, ALSO KNOWN AS WRIGHT ROAD, TO THE FLORIDA DEPARTMENT OF TRANSPORTATION.
MEETING DATE REQUESTED:	April 3, 2017

Statement of Issue: **ON JANUARY 17, 2017, THE BOARD VOTED AND APPROVED THE TRANSFER OF A SECTION OF STATE ROUTE 55, ALSO KNOWN AS US ROUTE 221 FROM THE CITY LIMITS OF PERRY TO THE INTERSECTION OF COUNTY ROAD 359, ALSO KNOWN AS WRIGHT ROAD, AND SUBSEQUENTLY TRANSFER COUNTY ROAD 359, ALSO KNOWN AS WRIGHT ROAD, TO THE FLORIDA DEPARTMENT OF TRANSPORTATION.**

Recommended Action: **APPROVE**

Fiscal Impact: **NONE**

Budgeted Expense: **NONE**

Submitted By: **COUNTY ADMINISTRATOR**

Contact:

SUPPLEMENTAL MATERIAL / ISSUE ANALYSIS

History, Facts & Issues:

Options:

Attachments: DRAFT RESOLUTION

RESOLUTION NO._____

A RESOLUTION OF THE BOARD OF COUNTY COMMISSIONERS OF TAYLOR COUNTY, FLORIDA, REQUESTING THE FLORIDA DEPARTMENT OF TRANSPORTATION (FDOT) TO CONTINUE THE PROCESS OF TRANSFERRING A SECTION OF STATE ROUTE 55, ALSO KNOWN AS US ROUTE 221, FROM THE CITY LIMITS OF PERRY, FLORIDA, TO THE INTERSECTION OF COUNTY ROAD 359, ALSO KNOWN AS WRIGHT ROAD AND SUBSEQUENTLY TRANSFER COUNTY ROAD 359 ALSO KNOWN AS WRIGHT ROAD TO THE FLORIDA DEPARTMENT OF TRANSPORTATION (FDOT).

WHEREAS, the Board of County Commissioners of Taylor County, Florida have been requested to pass a Resolution for the transfer of roads to be listed below, and

WHEREAS, the Board finds that it would be in the best interest to make a request to the Florida Department of Transportation.

THEREFORE, BE IT RESOLVED BY THE BOARD OF COUNTY COMMISSIONERS OF TAYLOR COUNTY, FLORIDA that:

1. The Board of County Commissioners of Taylor County, Florida requests the Florida Department of Transportation (FDOT) to continue the process of transferring a section of State Route 55, also known as US Route 221, from the City Limits of Perry, Florida to the intersection of County Road 359, also known as Wright Road, and subsequently transfer County Road 359, also known as Wright Road from the County to Florida Department of Transportation.

2. The Board will do all that is necessary for its part to effectuate the transfer.

PASSED AND ADOPTED in regular session this _____ day of _____, 2017.

BOARD OF COUNTY COMMISSIONERS
TAYLOR COUNTY, FLORIDA.

BY: _____
PAM FEAGLE, Chairperson

ATTEST:

_____
ANNIE MAE MURPHY, Clerk

11

TAYLOR COUNTY BOARD OF COMMISSIONERS	
County Commission Agenda Item	
SUBJECT/TITLE:	Board to review and approve the 2016-2017 evaluation of the Community Transportation Coordinator (CTC) -Big Bend Transit as required by the Florida Commission for the Transportation Disadvantaged .
MEETING DATE REQUESTED:	April 3, 2017

Statement of Issue: Board to review and approve the 2016-2017 evaluation of the CTC- Big Bend Transit for the local transportation disadvantaged programs.

Recommended Action: Approve CTC evaluation

Budgeted Expense: The CTC annual evaluation is a requirement for the County to receive funding from the Florida Commission for the Transportation Disadvantaged.

Submitted By: Melody Cox

Contact: Melody Cox

SUPPLEMENTAL MATERIAL / ISSUE ANALYSIS

History, Facts & Issues: As per the terms of the Planning Grant Agreement, the annual evaluation of the CTC is a requirement. There were no negative findings when evaluating the CTC and no complaints have been filed with the TD helpline in reference to the CTC.

Attachments: CTC Evaluation Workbook and attachments.

TAYLOR COUNTY LOCAL COORDINATING BOARD
COMMUNITY TRANSPORTATION COORDINATOR
REVIEW FY 2016-2017

TABLE OF CONTENTS

CTC Evaluation Workbook

ATTACHMENT A	**BBT Complaint Process**
ATTACHMENT B	**BBT Brochures**
ATTACHMENT C	**Eligibility Applications**
ATTACHMENT D	**SSP Compliance Review (Section 5311)**
ATTACHMENT E	**Annual Safety Certification FDOT Certification of Compliance Section 534 and Drug and Alcohol Policy**
ATTACHMENT F	**LCB Grievance Procedures**

CTC

EVALUATION WORKBOOK

Florida Commission for the

Transportation Disadvantaged

CTC BEING REVIEWED: Big Bend Transit

COUNTY (IES): Taylor

ADDRESS: P.O. Box 1721, Tallahassee, FL 32302

CONTACT: Shawn Mitchell **PHONE:** 850-574-6266

REVIEW PERIOD: FY 2016-2017 **REVIEW DATES:** 2/24,3/8 & 3/16/17

PERSON CONDUCTING THE REVIEW: M.Cox,J.Boothby,J.Collins

CONTACT INFORMATION: Melody Cox 850-838-3553

FORMATTED 2011 – 2012

LCB EVALUATION WORKBOOK

ITEM	PAGE
REVIEW CHECKLIST	3
EVALUATION INFORMATION	5
ENTRANCE INTERVIEW QUESTIONS	6
GENERAL QUESTIONS	9
CHAPTER 427, F.S.	13
RULE 41-2, F.A.C.	22
COMMISSION STANDARDS	32
LOCAL STANDARDS	33
AMERICANS WITH DISABILITIES ACT	36
FY GRANT QUESTIONS	42
STATUS REPORT	43
ON-SITE OBSERVATION	45
SURVEYS	47
LEVEL OF COST WORKSHEET # 1	52
LEVEL OF COMPETITION WORKSHEET #2	53
LEVEL OF AVAILABILITY WORKSHEET #3	55

REVIEW CHECKLIST & SCHEDULE

COLLECT FOR REVIEW:

- ☐ APR Data Pages
- ☒ QA Section of TDSP
- ☒ Last Review (Date: 5/25/2016)
- ☐ List of Omb. Calls
- ☐ QA Evaluation
- ☒ Status Report (from last review)
- ☒ AOR Submittal Date
- ☐ TD Clients to Verify
- ☐ TDTF Invoices
- ☐ Audit Report Submittal Date

ITEMS TO REVIEW ON-SITE:

- ☒ SSPP
- ☐ Policy/Procedure Manual
- ☒ Complaint Procedure
- ☒ Drug & Alcohol Policy (see certification)
- ☒ Grievance Procedure
- ☐ Driver Training Records (see certification)
- ☐ Contracts
- ☐ Other Agency Review Reports
- ☐ Budget
- ☐ Performance Standards
- ☐ Medicaid Documents

ITEMS TO REQUEST:

- ☐ **REQUEST INFORMATION FOR RIDER/BENEFICIARY SURVEY** (Rider/Beneficiary Name, Agency who paid for the trip [sorted by agency and totaled], and Phone Number)
- ☐ **REQUEST INFORMATION FOR CONTRACTOR SURVEY** (Contractor Name, Phone Number, Address and Contact Name)
- ☐ **REQUEST INFORMATION FOR PURCHASING AGENCY SURVEY** (Purchasing Agency Name, Phone Number, Address and Contact Name)
- ☐ **REQUEST ANNUAL QA SELF CERTIFICATION** (Due to CTD annually by January 15th).
- ☐ **MAKE ARRANGEMENTS FOR VEHICLES TO BE INSPECTED** (Only if purchased after 1992 and privately funded).

INFORMATION OR MATERIAL TO TAKE WITH YOU:

☐ Measuring Tape ☐ Stop Watch

EVALUATION INFORMATION

An LCB review will consist of, but is not limited to the following pages:

1	Cover Page
5 - 6	Entrance Interview Questions
12	Chapter 427.0155 (3) Review the CTC monitoring of contracted operators
13	Chapter 427.0155 (4) Review TDSP to determine utilization of school buses and public transportation services
19	Insurance
23	Rule 41-2.011 (2) Evaluation of cost-effectiveness of Coordination Contractors and Transportation Alternatives
25 - 29	Commission Standards and Local Standards
39	On-Site Observation
40 – 43	Surveys
44	Level of Cost - Worksheet 1
45- 46	Level of Competition – Worksheet 2
47 - 48	Level of Coordination – Worksheet 3

Notes to remember:

- **The CTC should not conduct the evaluation or surveys. If the CTC is also the PA, the PA should contract with an outside source to assist the LCB during the review process.**
- **Attach a copy of the Annual QA Self Certification.**

ENTRANCE INTERVIEW QUESTIONS

INTRODUCTION AND BRIEFING:

- ☑ Describe the evaluation process (LCB evaluates the CTC and forwards a copy of the evaluation to the CTD).

- ☑ The LCB reviews the CTC once every year to evaluate the operations and the performance of the local coordinator.

  The LCB will be reviewing the following areas:

  - ☑ Chapter 427, Rules 41-2 and 14-90, CTD Standards, and Local Standards
  - ☑ Following up on the Status Report from last year and calls received from the Ombudsman program.
  - ☑ Monitoring of contractors.
  - ☑ Surveying riders/beneficiaries, purchasers of service, and contractors

- ☑ The LCB will issue a Review Report with the findings and recommendations to the CTC no later than 30 working days after the review has concluded.

- ☑ Once the CTC has received the Review Report, the CTC will submit a Status Report to the LCB within 30 working days.

- ☑ Give an update of Commission level activities (last meeting update and next meeting date), if needed.

USING THE APR, COMPILE THIS INFORMATION:

1. OPERATING ENVIRONMENT:

   ☑ RURAL ☐ URBAN

2. ORGANIZATION TYPE:

   - ☐ PRIVATE-FOR-PROFIT
   - ☑ PRIVATE NON-PROFIT
   - ☐ GOVERNMENT
   - ☐ TRANSPORTATION AGENCY

3. NETWORK TYPE:

- ☒ SOLE PROVIDER
- ☐ PARTIAL BROKERAGE
- ☐ COMPLETE BROKERAGE

4. NAME THE OPERATORS THAT YOUR COMPANY HAS CONTRACTS WITH:

Not applicable.

5. NAME THE GROUPS THAT YOUR COMPANY HAS COORDINATION CONTRACTS WITH: Not applicable. BBT does not have Coordination Contracts.

Coordination Contract Agencies				
Name of Agency	**Address**	**City, State, Zip**	**Telephone Number**	**Contact**

6. NAME THE ORGANIZATIONS AND AGENCIES THAT PURCHASE SERVICE FROM THE CTC AND THE PERCENTAGE OF TRIPS EACH REPRESENTS? (Recent APR information may be used)

Name of Agency	% of Trips	Name of Contact	Telephone Number
CTD	32.6%	Sheri Powers	850-410-5718
AHCA	19.8%	Deweece Ogden	904-789-4267
TAYLOR CO. BOCC	47.6%	Melody Cox	850-838-3553

7. **REVIEW AND DISCUSS TD HELPLINE CALLS:**

	Number of calls	Closed Cases	Unsolved Cases
Cost	0		
Medicaid	0		
Quality of Service	0		
Service Availability	0		
Toll Permit	0		
Other	0		

GENERAL QUESTIONS

Use the TDSP to answer the following questions. If these are not addressed in the TDSP, follow-up with the CTC.

1. DESIGNATION DATE OF CTC: 7/01/2016

2. WHAT IS THE COMPLAINT PROCESS?

   See attachment.

   IS THIS PROCESS IN WRITTEN FORM? ☒ Yes ☐ No
   (Make a copy and include in folder)

   Is the process being used? ☒ Yes ☐ No

3. DOES THE CTC HAVE A COMPLAINT FORM? ☒ Yes ☐ No
   (Make a copy and include in folder)

4. DOES THE COMPLAINT FORM INCORPORATE ALL ELEMENTS OF THE CTD'S UNIFORM SERVICE REPORTING GUIDEBOOK?

   ☒ Yes ☐ No

5. DOES THE FORM HAVE A SECTION FOR RESOLUTION OF THE COMPLAINT?

   ☒ Yes ☐ No

   Review completed complaint forms to ensure the resolution section is being filled out and follow-up is provided to the consumer.

6. IS A SUMMARY OF COMPLAINTS GIVEN TO THE LCB ON A REGULAR BASIS?

   ☒ Yes ☐ No

7. WHEN IS THE DISSATISFIED PARTY REFERRED TO THE TD HELPLINE?

   See Grievance Procedures attachment. Every effort will be made by the CTC and the LCB to satisfy the rider/party prior to referring to the TD Helpline.

8. WHEN A COMPLAINT IS FORWARDED TO YOUR OFFICE FROM THE OMBUDSMAN PROGRAM, IS THE COMPLAINT ENTERED INTO THE LOCAL COMPLAINT FILE/PROCESS?

   ☒ Yes ☐ No

   If no, what is done with the complaint?

9. DOES THE CTC PROVIDE WRITTEN RIDER/BENEFICIARY INFORMATION OR BROCHURES TO INFORM RIDERS/ BENEFICIARIES ABOUT TD SERVICES?

☒ Yes ☐ No If yes, what type?

Big Bend Transit (the CTC) provides brochures to riders and the brochure is distributed at key user locations in the County such as the VA office and clinic, the health department and County offices. The brochure is an attachment.

10. DOES THE RIDER/ BENEFICIARY INFORMATION OR BROCHURE LIST THE OMBUDSMAN NUMBER?

☒ Yes ☐ No

11. DOES THE RIDER/ BENEFICIARY INFORMATION OR BROCHURE LIST THE COMPLAINT PROCEDURE?

☒ Yes ☐ No

12. WHAT IS YOUR ELIGIBILITY PROCESS FOR TD RIDERS/ BENEFICIARIES?

By application in which applicants must qualify in one or more of the following areas: age, income, or mental and/or physical disability.

Please Verify These Passengers Have an Eligibility Application on File:

TD Eligibility Verification			
Name of Client	**Address of client**	**Date of Ride**	**Application on File?**

13. WHAT INNOVATIVE IDEAS HAVE YOU IMPLEMENTED IN YOUR COORDINATED SYSTEM?

As a rural area with a large service area, the CTC works closely with adjacent counties to maximize available transportation services. The CTC works closely with the County to provide special programs/services such as the annual holiday shuttle and Veterans programs.

14. ARE THERE ANY AREAS WHERE COORDINATION CAN BE IMPROVED?

The CTC works closely with the County ensuring the best possible services are provided with available funding. There is a need to expand services for students traveling out of county to educational facilities but that is not possible at this time due to lack of funding. The County hopes to expand its program to offer more services to the coastal communities located in the south end of the County, particularly Steinhatchee.

15. WHAT BARRIERS ARE THERE TO THE COORDINATED SYSTEM?

Financial. Taylor County is a rural county designated as one of "critical economic concern" and a Rural Area of Opportunity. The County is one of the largest in the state with 1,233 square miles and distance is also a barrier. The south end of the County is more than 40 miles from services such as medical and retail outlets. Travel is made more difficult due to more than half of the roads in the County being unpaved.

16. ARE THERE ANY AREAS THAT YOU FEEL THE COMMISSION SHOULD BE AWARE OF OR CAN ASSIST WITH?

Big Bend Transit (BBT) has been very responsive to the Taylor County LCB and staff. The Taylor County Board of Commissioners as well as the LCB are very satisfied with BBT and the service they provide our citizens. BBT has always went above and beyond assisting the County with transportation needs and addressing any concerns or requests the County may have.

17. WHAT FUNDING AGENCIES DOES THE CTD NEED TO WORK CLOSELY WITH IN ORDER TO FACILITATE A BETTER-COORDINATED SYSTEM?

Department of Elderly Affairs or Senior Services. There seems to be a gap in the transportation services offered to seniors in Taylor County. Outlying rural areas definitely lack access to TD services. TD services are completely unaffordable in the outlying rural areas to many of our low income residents due to distance.

18. HOW ARE YOU MARKETING THE VOLUNTARY DOLLAR?

Voluntary dollars are used for the local "in town" shuttle program, Veteran's programs, Special Needs Adult Program (SNAP), and transportation for local participants in the Special Olympics. The County offers free transportation on the "in town" shuttle for all riders during the month of December.

GENERAL QUESTIONS

Findings:

There are no findings which had a negative impact on the program. BBT responds immediately to requests made by the Taylor County BOCC, Planning Grant Manager and the LCB. BBT has been very responsive to dissatisfied riders. BBT has become a valuable member of the community and has gone above and beyond to provide assistance in any way possible to the County. Our riders, as well as the Board of Commissioners and the LCB know BBT truly cares about the welfare of the citizens of Taylor County not just the TD population.

Recommendations:

Continue to meet riders needs and ensure complaints are addressed in a timely manner. Continue to work closely with the County addressing the needs of the local transportation disadvantaged as well as the local "in town" shuttle riders.

COMPLIANCE WITH CHAPTER 427, F.S.

Review the CTC contracts for compliance with 427.0155(1), F.S.
"Execute uniform contracts for service using a standard contract, which includes performance standards for operators."

ARE YOUR CONTRACTS UNIFORM? ☐ Yes ☐ No

IS THE CTD'S STANDARD CONTRACT UTILIZED? ☐ Yes ☐ No

DO THE CONTRACTS INCLUDE PERFORMANCE STANDARDS FOR THE TRANSPORTATION OPERATORS AND COORDINATION CONTRACTORS?

☐ Yes ☐ No

DO THE CONTRACTS INCLUDE THE PROPER LANGUAGE CONCERNING PAYMENT TO SUBCONTRACTORS? (Section 21.20: Payment to Subcontractors, T&E Grant, and FY)

☐ Yes ☐ No

IS THE CTC IN COMPLIANCE WITH THIS SECTION? ☐ Yes ☐ No

Operator Name	Exp. Date	SSPP	AOR Reporting	Insurance
The CTC has no outside				
contracts with operators at				
this time.				

COMPLIANCE WITH CHAPTER 427, F.S.

Review the CTC last AOR submittal for compliance with 427. 0155(2)
"Collect Annual Operating Data for submittal to the Commission."

REPORTING TIMELINESS

Were the following items submitted on time?

a. Annual Operating Report ☒ Yes ☐ No

Any issues that need clarification? ☐ Yes ☒ No

Any problem areas on AOR that have been re-occurring?

List: There have been no re-occurring problem areas.

b. Memorandum of Agreement ☒ Yes ☐ No

c. Transportation Disadvantaged Service Plan ☒ Yes ☐ No

d. Grant Applications to TD Trust Fund ☒ Yes ☐ No

e. All other grant application (100%) ☒ Yes ☐ No

IS THE CTC IN COMPLIANCE WITH THIS SECTION? ☒ Yes ☐ No

Comments:

CTC was in compliance with Chapter 427, F.S. A copy of the last AOR is included in the evaluation attachments. There were no issues in the AOR that need clarification or were problematic. The CTC (Big Bend Transit) was reappointed to serve as the CTC in Taylor County in July 2016. The MOA will be in effect from July 1, 2016 to June 30, 2021.

COMPLIANCE WITH CHAPTER 427, F.S.

Review the CTC monitoring of its transportation operator contracts to ensure compliance with 427.0155(3), F.S.
"Review all transportation operator contracts annually."

WHAT TYPE OF MONITORING DOES THE CTC PERFORM ON ITS OPERATOR(S) AND HOW OFTEN IS IT CONDUCTED?

Daily monitoring and annual monitoring passenger surveys are conducted by the General Manager. BBT has a System Safety Program and Driver Alert Program. BBT obtained the Bus Transit System Annual Safety and Security Certification and the FDOT Certificate of Compliance required for Section 5311 funding. BBT currently does not use outside operators or contractors.

Is a written report issued to the operator? ☒ Yes ☐ No

If **NO**, how are the contractors notified of the results of the monitoring?

WHAT TYPE OF MONITORING DOES THE CTC PERFORM ON ITS COORDINATION CONTRACTORS AND HOW OFTEN IS IT CONDUCTED?

Not applicable as BBT doesn't use a Coordination Contractor in Taylor County.

Is a written report issued? ☐ Yes ☐ No

If **NO**, how are the contractors notified of the results of the monitoring?

WHAT ACTION IS TAKEN IF A CONTRACTOR RECEIVES AN UNFAVORABLE REPORT?

Not applicable.

IS THE CTC IN COMPLIANCE WITH THIS SECTION? ☒ Yes ☐ No

ASK TO SEE DOCUMENTATION OF MONITORING REPORTS.

COMPLIANCE WITH CHAPTER 427, F.S.

Review the TDSP to determine the utilization of school buses and public transportation services [Chapter 427.0155(4)]
"Approve and coordinate the utilization of school bus and public transportation services in accordance with the TDSP."

HOW IS THE CTC USING SCHOOL BUSES IN THE COORDINATED SYSTEM?

The CTC does not utilize school buses in Taylor County.

Rule 41-2.012(5)(b): *"As part of the Coordinator's performance, the local Coordinating Board shall also set an annual percentage goal increase for the number of trips provided within the system for ridership on public transit, where applicable. In areas where the public transit is not being utilized, the local Coordinating Board shall set an annual percentage of the number of trips to be provided on public transit."*

HOW IS THE CTC USING PUBLIC TRANSPORTATION SERVICES IN THE COORDINATED SYSTEM?

☒ N/A

IS THERE A GOAL FOR TRANSFERRING PASSENGERS FROM PARATRANSIT TO TRANSIT?

☐ Yes ☒ No

If YES, what is the goal?

Not applicable.

Is the CTC accomplishing the goal? ☐ Yes ☐ No
Not applicable.

IS THE CTC IN COMPLIANCE WITH THIS REQUIREMENT? ☒ Yes ☐ No

Comments:
Taylor County does not have a public transit system.

COMPLIANCE WITH CHAPTER 427, F.S.

Review of local government, federal and state transportation applications for TD funds (all local, state or federal funding for TD services) for compliance with 427.0155(5).
"Review all applications for local government, federal, and state transportation disadvantaged funds, and develop cost-effective coordination strategies."

IS THE CTC INVOLVED WITH THE REVIEW OF APPLICATIONS FOR TD FUNDS, IN CONJUNCTION WITH THE LCB? (TD Funds include *all* funding for transportation disadvantaged services, i.e. Section 5310 [formerly Sec.16] applications for FDOT funding to buy vehicles granted to agencies who are/are not coordinated)

☒ Yes ☐ No

If Yes, describe the application review process.

The CTC prepares applicable transportation grant applications on behalf of Taylor County. The LCB reviews and approves the grant application at quarterly meetings or special meetings when so needed. The LCB is provided copies of grant applications at least 10 days prior to LCB meetings in which the application will be approved.

If no, is the LCB currently reviewing applications for TD funds (any federal, state, and local funding)? ☐ Yes ☐ No

Not applicable.

If no, is the planning agency currently reviewing applications for TD funds?

☐ Yes ☐ No

Not applicable.

IS THE CTC IN COMPLIANCE WITH THIS SECTION? ☒ Yes ☐ No

Comments:

The LCB, CTC and County work closely together on pursuing grants and other funding sources to provide services to the transportation disadvantaged in Taylor County.

COMPLIANCE WITH CHAPTER 427, F.S.

Review priorities listed in the TDSP, according to Chapter 427.0155(7).
"Establish priorities with regard to the recipients of non-sponsored transportation disadvantaged services that are purchased with Transportation Disadvantaged Trust monies."

REVIEW THE QA SECTION OF THE TDSP (ask CTC to explain):

The QA Section of the TDSP has been reviewed with the CTC. The CTC is in compliance with Chapter 427.0155(7). The annual update of the TDSP will be complete by May 2017 and the QA Section will be updated if so needed.

WHAT ARE THE PRIORITIES FOR THE TDTF TRIPS?

See attachment 18A.

HOW ARE THESE PRIORITIES CARRIED OUT?

These priorities are instrumental in the scheduling process. The CTC Reservationist obtains all pertinent passenger information and utilizes CTS Software for the trip scheduling process. These measures ensure the priorities are being carried out.

IS THE CTC IN COMPLIANCE WITH THIS SECTION? ☒ Yes ☐ No

Comments:
The CTC is in compliance with Chapter 427.0155(7).

Attachment 18A

Priorities for the TDFT Trips are as follows:

1. Medical and medical related trips
2. Employment (intra-county) trips
3. Personal business (intra-county) trips
4. Education/training (intra-county) trips
5. Shopping (intra-county) trips
6. Social/recreational (intra-county) trips
7. Employment (inter-county) trips
8. Other (inter-county) trips

COMPLIANCE WITH CHAPTER 427, F.S.

Ensure CTC compliance with the delivery of transportation services, 427.0155(8).
"Have full responsibility for the delivery of transportation services for the transportation disadvantaged as outlined in s. 427.015(2)."

Review the Operational section of the TDSP

1. Hours of Service:

   See attachment 19A.

2. Hours of Intake:

   Applicable pages from the TDSP are an attachment to the evaluation.

3. Provisions for After Hours Reservations/Cancellations?

   Message on answering service.

4. What is the minimum required notice for reservations?

   One day in advance of the day of travel and needed transportation.

5. How far in advance can reservations be place (number of days)?

   Thirty (30) days.

IS THE CTC IN COMPLIANCE WITH THIS SECTION? ☒ Yes ☐ No

Comments:
The CTC is in compliance and there are no problems in this area.

Attachment 19A

Service Hours:

6:00 a.m. to 6:00 p.m. seven days a week, for reservation/demand services. The Veteran's shuttle to Lake City VA Hospital runs on Tuesday at 7:30 a.m. The Veteran's shuttle to the VA medical facility in Tallahassee runs on Thursday at 7:30 a.m. The TDTF and the Taylor County Board of Commissioners fund this program. Local "in town" shuttle operates from 7:00 a.m. to 6:00 p.m. Monday through Friday. The shuttle is funded by the Taylor County Board of Commissioners.

COMPLIANCE WITH CHAPTER 427, F.S.

Review the cooperative agreement with the local WAGES coalitions according to Chapter 427.0155(9).
"Work cooperatively with local WAGES coalitions established in Chapter 414 to provide assistance in the development of innovative transportation services for WAGES participants."

WHAT TYPE OF ARRANGEMENT DO YOU HAVE WITH THE LOCAL WAGES COALITION?

Purchase Order for reservation service and/or price arrangements approved by CTC.

HAVE ANY INNOVATIVE WAGES TRANSPORTATION SERVICES BEEN DEVELOPED?

Not at this time.

IS THE CTC IN COMPLIANCE WITH THIS SECTION? ☒ Yes ☐ No

Comments:
None. The CTC is in compliance.

CHAPTER 427

Findings:

There were no findings and the CTC is in compliance with Chapter 427, F.S.

Recommendations:

None at this time.

COMPLIANCE WITH 41-2, F.A.C.

Compliance with 41-2.006(1), Minimum Insurance Compliance
"...ensure compliance with the minimum liability insurance requirement of $100,000 per person and $200,000 per incident..."

WHAT ARE THE MINIMUM LIABILITY INSURANCE REQUIREMENTS?

$100,000/Person
$200,000/Incident
CTC $1,000,000

WHAT ARE THE MINIMUM LIABILITY INSURANCE REQUIREMENTS IN THE OPERATOR AND COORDINATION CONTRACTS?

$100,000/Person
$200,000/Incident

HOW MUCH DOES THE INSURANCE COST (per operator)?

Operator	Insurance Cost
BBT	$159,982 for a fleet of 85 vehicles
	9 for County

DOES THE MINIMUM LIABILITY INSURANCE REQUIREMENTS EXCEED $1 MILLION PER INCIDENT?

☐ Yes ☒ No

If yes, was this approved by the Commission? ☐ Yes ☐ No

IS THE CTC IN COMPLIANCE WITH THIS SECTION? ☒ Yes ☐ No

Comments:
The CTC is in compliance with 41-2.006(1).

COMPLIANCE WITH 41-2, F.A.C.

Compliance with 41-2.006(2), Safety Standards.
"...shall ensure the purchaser that their operations and services are in compliance with the safety requirements as specified in Section 341.061(2)(a), F.S. and 14-90, F.A.C."

Date of last SSPP Compliance Review 1/13/2017 *, Obtain a copy of this review.*

Review the last FDOT SSPP Compliance Review, if completed in over a year, check drivers' records. If the CTC has not monitored the operators, check drivers' files at the operator's site.

IS THE CTC IN COMPLIANCE WITH THIS SECTION? ☒ Yes ☐ No

ARE THE CTC CONTRACTED OPERATORS IN COMPLIANCE WITH THIS SECTION?
☐ Yes ☐ No

DRIVER REQUIREMENT CHART

Driver Last Name	Driver License	Last Physical	CPR/1st Aid	Def. Driving	ADA Training	Other-

Sample Size: 1-20 Drivers – 50-100% 21-100 Drivers – 20-50% 100+ Drivers – 5-10%

Driver Last Name	Driver License	Last Physical	CPR/1st Aid	Def. Driving	ADA Training	Other-

Sample Size: 1-20 Drivers – 50-100% 21-100 Drivers – 20-50% 100+ Drivers – 5-10%

COMPLIANCE WITH 41-2, F.A.C.

Compliance with 41-2.006(3), Drug and Alcohol Testing
"...shall assure the purchaser of their continuing compliance with the applicable state or federal laws relating to drug testing..."

With which of the following does the CTC (and its contracted operators) Drug and Alcohol Policy comply?

- ☒ FTA (Receive Sect. 5307, 5309, or 5311 funding)
- ☐ FHWA (Drivers required to hold a CDL)
- ☐ Neither

REQUEST A COPY OF THE DRUG & ALCOHOL POLICY AND LATEST COMPLIANCE REVIEW.

DATE OF LAST DRUG & ALCOHOL POLICY REVIEW: 6/30/2016

IS THE CTC IN COMPLIANCE WITH THIS SECTION? ☒ Yes ☐ No

Comments:
The CTC is in compliance and a copy of the latest BBT Compliance Review and Drug & Alcohol Policy is an attachment to the evaluation.

COMPLIANCE WITH 41-2, F.A.C.

Compliance with 41-2.011(2), Evaluating Cost-Effectiveness of Coordination Contractors and Transportation Alternatives.
"...contracts shall be reviewed annually by the Community Transportation Coordinator and the Coordinating Board as to the effectiveness and efficiency of the Transportation Operator or the renewal of any Coordination Contracts."

1. IF THE CTC HAS COORDINATION CONTRACTORS, DETERMINE THE COST-EFFECTIVENESS OF THESE CONTRACTORS.

Cost [CTC and Coordination Contractor (CC)]

	CTC	CC #1	CC #2	CC #3	CC #4
Flat contract rate (s) ($ amount / unit)					
Detail other rates as needed: (e.g. ambulatory, wheelchair, stretcher, out-of-county, group)					
Special or unique considerations that influence costs?					
Explanation: Not applicable. The CTC does not use Coordination Contractors.					

2. DO YOU HAVE TRANSPORTATION ALTERNATIVES? ☐ Yes ☒ No
(Those specific transportation services approved by rule or the Commission as a service not normally arranged by the Community Transportation Coordinator, but provided by the purchasing agency. Example: a neighbor providing the trip)

Cost [CTC and Transportation Alternative (Alt.)]

	CTC	Alt. #1	Alt. #2	Alt. #3	Alt. #4
Flat contract rate (s) ($ amount / unit)					
Detail other rates as needed: (e.g. ambulatory, wheelchair, stretcher, out-of-county, group)					
Special or unique considerations that influence costs?					
Explanation: The CTC does not have and/or use transportation alternatives.					

IS THE CTC IN COMPLIANCE WITH THIS SECTION? ☒ Yes ☐ No

RULE 41-2

Findings:

Not applicable.

Recommendations:

Not applicable.

COMPLIANCE WITH 41-2, F.A.C.

Compliance with Commission Standards
"...shall adhere to Commission approved standards..."

Review the TDSP for the Commission standards.

Commission Standards	Comments
Local toll free phone number must be posted in all vehicles.	The toll free phone number was posted in all vehicles and in an easy to see location.
Vehicle Cleanliness	The vehicles were neat and clean.
Passenger/Trip Database	In compliance.

Adequate seating	There was adequate seating and storage.
Driver Identification	The drivers were wearing identification on all occasions the Review Committee rode the shuttle.
Passenger Assistance	The drivers were helpful and offered assistance to passengers in need. The drivers were particularly helpful with elderly riders who had packages.
Smoking, Eating and Drinking	There were no signs of smoking, eating or drinking on the shuttle. The vehicle was neat and clean.

Two-way Communications	In compliance.
Air Conditioning/Heating	The Committee rode the shuttle at various times when air conditioning and heating were needed. In all instances the heating and cooling system was fully operational and the shuttle had a comfortable temperature. The driver was considerate of rider comfort.
Billing Requirements	In compliance.

COMMISSION STANDARDS

Findings:

As in the past, the highlight of the CTC evaluation is riding on the BBT shuttles and talking with the riders and the drivers. The passengers were happy with BBT and many expressed how important the shuttle/van services were to them. The only concerns were the need for expanded services. The drivers were courteous and helpful. When scheduling passenger trips for the shuttle, BBT staff is always polite and responsive. BBT is truly a valuable partner to the County addressing local transportation needs.

Recommendations:

Continue the great job!

COMPLIANCE WITH 41-2, F.A.C.

Compliance with Local Standards
"...shall adhere to Commission approved standards..."

Review the TDSP for the Local standards.

Local Standards	Comments
Transport of Escorts and dependent children policy	The CTC was in compliance with TDSP standards.
Use, Responsibility, and cost of child restraint devices	The CTC was in compliance.
Out-of-Service Area trips	The CTC was in compliance with the TDSP.
CPR/1st Aid	The CTC was in compliance.
Driver Criminal Background Screening	The CTC was in compliance with TD and local standards.
Rider Personal Property	The CTC was in compliance.
Advance reservation requirements	The CTC was in compliance with the TDSP.
Pick-up Window	The CTC was in compliance.

Measurable Standards/Goals	*Standard/Goal*	*Latest Figures*	*Is the CTC/Operator meeting the Standard?*
Public Transit Ridership	CTC	CTC	17,947
	Operator A	Operator A	
	Operator B	Operator B	
	Operator C	Operator C	
On-time performance	CTC	CTC	No complaints
	Operator A	Operator A	
	Operator B	Operator B	
	Operator C	Operator C	
Passenger No-shows	CTC	CTC	227
	Operator A	Operator A	
	Operator B	Operator B	
	Operator C	Operator C	
Accidents	CTC	CTC	0
	Operator A	Operator A	
	Operator B	Operator B	
	Operator C	Operator C	
Roadcalls	CTC	CTC	3
	Operator A	Operator A	
Average age of fleet:	Operator B	Operator B	
	Operator C	Operator C	
Complaints	CTC	CTC	0
	Operator A	Operator A	
Number filed:	Operator B	Operator B	
	Operator C	Operator C	
Call-Hold Time	CTC	CTC	No complaints
	Operator A	Operator A	
	Operator B	Operator B	
	Operator C	Operator C	

LOCAL STANDARDS

Findings:

There were no negative findings and the CTC meets both TD and local standards.

Recommendations:

Continue to meet standards and goals of the TDSP.

COMPLIANCE WITH AMERICANS WITH DISABILITIES ACT

REVIEW COPIES OF THE PUBLIC INFORMATION PROVIDED.

DOES PUBLIC INFORMATION STATE THAT ACCESSIBLE FORMATS ARE AVAILABLE UPON REQUEST? ☒ Yes ☐ No

ARE ACCESSIBLE FORMATS ON THE SHELF? ☒ Yes ☐ No

IF NOT, WHAT ARRANGEMENTS ARE IN PLACE TO HAVE MATERIAL PRODUCED IN A TIMELY FASHION UPON REQUEST?

DO YOU HAVE TTY EQUIPMENT OR UTILIZE THE FLORIDA RELAY SYSTEM?

☒ Yes ☐ No

IS THE TTY NUMBER OR THE FLORIDA RELAY SYSTEM NUMBERS LISTED WITH THE OFFICE PHONE NUMBER? ☒ Yes ☐ No

Florida Relay System:
Voice- 1-800-955-8770
TTY- 1-800-955-8771

EXAMINE OPERATOR MANUALS AND RIDER INFORMATION. DO CURRENT POLICIES COMPLY WITH ADA PROVISION OF SERVICE REQUIREMENTS REGARDING THE FOLLOWING:

Provision of Service	Training Provided	Written Policy	Neither
Accommodating Mobility Aids	Yes	Yes	
Accommodating Life Support Systems (O_2 Tanks, IV's...)	Yes	Yes	
Passenger Restraint Policies	Yes	Yes	
Standee Policies (persons standing on the lift)	Yes	Yes	
Driver Assistance Requirements	Yes	Yes	
Personal Care Attendant Policies	Yes	Yes	
Service Animal Policies	Yes	Yes	
Transfer Policies (From mobility device to a seat)	Yes	Yes	
Equipment Operation (Lift and securement procedures)	Yes	Yes	
Passenger Sensitivity/Disability Awareness Training for Drivers	Yes	Yes	

RANDOMLY SELECT ONE OR TWO VEHICLES PER CONTRACTOR (DEPENDING ON SYSTEM SIZE) THAT ARE IDENTIFIED BY THE CTC AS BEING ADA ACCESSIBLE AND PURCHASED WITH PRIVATE FUNDING, AFTER 1992. CONDUCT AN INSPECTION USING THE ADA VEHICLE SPECIFICATION CHECKLIST.

All BBT vehicles meet ADA Standards.

INSPECT FACILITIES WHERE SERVICES ARE PROVIDED TO THE PUBLIC (ELIGIBILITY DETERMINATION, TICKET/COUPON SALES, ETC...).

IS A RAMP PROVIDED? ☐ Yes ☐ No

Not applicable for this evaluation.

ARE THE BATHROOMS ACCESSIBLE? ☐ Yes ☐ No

Not applicable for this evaluation.

Bus and Van Specification Checklist

Name of Provider: Not applicable for this review.

Vehicle Number (either VIN or provider fleet number):

Type of Vehicle: ☐ Minivan ☐ Van ☐ Bus (>22')
☐ Minibus (<= 22') ☐ Minibus (>22')

Person Conducting Review:

Date:

Review the owner's manual, check the stickers, or ask the driver the following:

- ☐ The lift must have a weight limit of at least 600 pounds.
- ☐ The lift must be equipped with an emergency back-up system (in case of loss of power to vehicle). Is the pole present?
- ☐ The lift must be "interlocked" with the brakes, transmission, or the door, so the lift will not move unless the interlock is engaged. Ensure the interlock is working correctly.

Have the driver lower the lift to the ground:

- ☐ Controls to operate the lift must require constant pressure.
- ☐ Controls must allow the up/down cycle to be reversed without causing the platform to "stow" while occupied.
- ☐ Sufficient lighting shall be provided in the step well or doorway next to the driver, and illuminate the street surface around the lift, the lighting should activate when the door/lift is in motion. Turn light switch on, to ensure lighting is working properly.

Once the lift is on the ground, review the following:

- ☐ Must have an inner barrier to prevent the mobility aid from rolling off the side closest to the vehicle until the platform is fully raised.
- ☐ Side barriers must be at least 1 ½ inches high.
- ☐ The outer barrier must be sufficient to prevent a wheelchair from riding over it.
- ☐ The platform must be slip-resistant.
- ☐ Gaps between the platform and any barrier must be no more than 5/8 of an inch.
- ☐ The lift must have two handrails.
- ☐ The handrails must be 30-38 inches above the platform surface.
- ☐ The handrails must have a useable grasping area of 8 inches, and must be at least 1 ½ inches wide and have sufficient knuckle clearance.
- ☐ The platform must be at least 28 1/2 inches wide measured at the platform surface, and 30 inches wide and 48 inches long measured 2 inches above the platform surface.

- ☐ If the ramp is not flush with the ground, for each inch off the ground the ramp must be 8 inches long.
- ☐ Lifts may be marked to identify the preferred standing position (suggested, not required)

Have the driver bring the lift up to the fully raised position (but not stowed):

- ☐ When in the fully raised position, the platform surface must be horizontally within 5/8 inch of the floor of the vehicle.
- ☐ The platform must not deflect more than 3 degrees in any direction. To test this, stand on the edge of the platform and carefully jump up and down to see how far the lift sways.
- ☐ The lift must be designed to allow boarding in either direction.

While inside the vehicle:

- ☐ Each securement system must have a clear floor area of 30 inches wide by 48 inches long.
- ☐ The securement system must accommodate all common wheelchairs and mobility aids.
- ☐ The securement system must keep mobility aids from moving no more than 2 inches in any direction.
- ☐ A seat belt and shoulder harness must be provided for each securement position, and must be separate from the security system of the mobility aid.

Vehicles under 22 feet must have:

- ☐ One securement system that can be either forward or rear-facing.
- ☐ Overhead clearance must be at least 56 inches. This includes the height of doors, the interior height along the path of travel, and the platform of the lift to the top of the door.

Vehicles over 22 feet must have:

- ☐ Must have 2 securement systems, and one must be forward-facing, the other can be either forward or rear-facing.
- ☐ Overhead clearance must be at least 68 inches. This includes the height of doors, the interior height along the path of travel, and the platform of the lift to the top of the door.

- ☐ Aisles, steps, and floor areas must be slip resistant.
- ☐ Steps or boarding edges of lift platforms must have a band of color which contrasts with the step/floor surface.

COMPLIANCE WITH AMERICANS WITH DISABILITIES ACT

Table 1. ADA Compliance Review - Provider/Contractor Level of Service Chart

Name of Service Provider/ Contractor	Total # of Vehicles Available for CTC Service	# of ADA Accessible Vehicles	Areas/Sub areas Served by Provider/Contractor
Big Bend Transit	9	9	Taylor County and surrounding area

BASED ON THE INFORMATION IN TABLE 1, DOES IT APPEAR THAT INDIVIDUALS REQUIRING THE USE OF ACCESSIBLE VEHICLES HAVE EQUAL SERVICE?

☒ Yes ☐ No

All riders of Big Bend Transit in Taylor County have equal service.

ADA COMPLIANCE

Findings:

No findings. The CTC was in compliance with ADA Standards. When speaking with riders during the evaluation process, the Review Committee concluded BBT goes above and beyond to provide ADA accessibility and the drivers are quick to provide assistance when so needed.

Recommendations:

None at this time. BBT is in compliance with ADA Standards and make every effort to accommodate rider needs and provide accessibility. Taylor County has been very pleased with BBT's awareness and commitment to rider accessibility.

FY _____/____ GRANT QUESTIONS

The following questions relate to items specifically addressed in the FY _ _____/_____ Trip and Equipment Grant.

DO YOU KEEP ALL RECORDS PERTAINING TO THE SPENDING OF TDTF DOLLARS FOR FIVE YEARS? (Section 7.10: Establishment and Maintenance of Accounting Records, T&E Grant, and FY 2015-2016 and 2016-2017)

☒ Yes ☐ No

ARE ALL ACCIDENTS THAT HAVE RESULTED IN A FATALITY REPORTED TO THE COMMISSION WITHIN 24 HOURS AFTER YOU HAVE RECEIVED NOTICE? (Section 14.80: Accidents, T/E Grant, and FY 2015-2016 and 2016-2017)

☒ Yes ☐ No

ARE ALL ACCIDENTS THAT HAVE RESULTED IN $1,000 WORTH OF DAMAGE REPORTED TO THE COMMISSION WITHIN 72 HOURS AFTER YOU HAVE RECEIVED NOTICE OF THE ACCIDENT? (Section 14.80: Accidents, T/E Grant, and FY 2015-2016 and 2016-2017)

☒ Yes ☐ No

STATUS REPORT FOLLOW-UP FROM LAST REVIEW(S)

DATE OF LAST REVIEW: 5/25/2016 STATUS REPORT DATED: 5/25/2016

CTD RECOMMENDATION:

There were no findings the last review. During the 2015 review it was noted the drivers did not enforce the wearing of seat belts. The CTC was contacted and this was immediately addressed and corrected.

CTC Response:

There were no findings and no complaints were filed.

Current Status:

The CTC was in compliance of TD, state, and local standards.

CTD RECOMMENDATION:

CTC Response:

Current Status:

CTD RECOMMENDATION:

CTC Response:

Current Status:

CTD RECOMMENDATION:

CTC Response:

Current Status:

CTD RECOMMENDATION:

CTC Response:

Current Status:

CTD RECOMMENDATION:

CTC Response:

Current Status:

ON-SITE OBSERVATION OF THE SYSTEM

RIDE A VEHICLE WITIN THE COORDINATED SYSTEM. REQUEST A COPY OF THE MANIFEST PAGE THAT CONTAINS THIS TRIP.

Date of Observation: 3/08/2017

Please list any special guests that were present:

Location: Taylor County Courthouse

Number of Passengers picked up/dropped off: 11

Ambulatory 11

Non-Ambulatory

Was the driver on time? ☒ Yes ☐ No - How many minutes late/early?

Did the driver provide any passenger assistance? ☒ Yes ☐ No

Was the driver wearing any identification? ☒ Yes: ☒ Uniform ☒ Name Tag ☒ ID Badge ☐ No

Did the driver render an appropriate greeting?

☒ Yes ☐ No ☐ Driver regularly transports the rider, not necessary

If CTC has a policy on seat belts, did the driver ensure the passengers were properly belted? ☒ Yes ☐ No

Was the vehicle neat and clean, and free from dirt, torn upholstery, damaged or broken seats, protruding metal or other objects? ☒ Yes ☐ No

Is there a sign posted on the interior of the vehicle with both a local phone number and the TD Helpline for comments/complaints/commendations? ☒ Yes ☐ No

Does the vehicle have working heat and air conditioning? ☒ Yes ☐ No

Does the vehicle have two-way communications in good working order? ☒ Yes ☐ No

If used, was the lift in good working order? ☒ Yes ☐ No

Was there safe and appropriate seating for all passengers? ☒ Yes ☐ No

Did the driver properly use the lift and secure the passenger? ☒ Yes ☐ No

If No, please explain:

CTC: Big Bend Transit, Inc. County: Taylor

Date of Ride: 3/08/2017

Funding Source	No. of Trips	No. of Riders/Beneficiaries	No. of Calls to Make	No. of Calls Made
CTD				
Medicaid				
Other		11 riders were on the shuttle trip(s). All 11 riders were satisfied.		
Other		Shuttle makes 22 stops on the route.		
Other)				
Other				
Totals				

Number of Round Trips	Number of Riders/Beneficiaries to Survey
0 – 200	30%
201 – 1200	10%
1201 +	5%

Note: Attach the manifest

RIDER/BENEFICIARY SURVEY

Staff making call: _____ County:_____
Date of Call: / / Funding Source: _____

1) Did you receive transportation service on _____? ☐ Yes or ☐ No

2) Where you charged an amount in addition to the co-payment? ☐ Yes or ☐ No

If so, how much?

3) How often do you normally obtain transportation?

☐ Daily 7 Days/Week ☐ Other ☐ 1-2 Times/Week ☐ 3-5Times/Week

4) Have you ever been denied transportation services?

☐ Yes

☐ No. If no, skip to question # 4

A. How many times in the last 6 months have you been refused transportation services?

☐ None ☐ 3-5 Times

☐ 1-2 Times ☐ 6-10 Times

If none, skip to question # 4.

B. What was the reason given for refusing you transportation services?

☐ Ineligible ☐ Space not available

☐ Lack of funds ☐ Destination outside service area

☐ Other _____

5) What do you normally use the service for?

☐ Medical ☐ Education/Training/Day Care

☐ Employment ☐ Life-Sustaining/Other

☐ Nutritional

6) Did you have a problem with your trip on _____?

☐ Yes. If yes, please state or choose problem from below

☐ No. If no, skip to question # 6

What type of problem did you have with your trip?

☐ Advance notice ☐ Cost

☐ Pick up times not convenient ☐ Late pick up-specify time of wait

☐ Assistance ☐ Accessibility

☐ Service Area Limits ☐ Late return pick up - length of wait

☐ Drivers - specify

☐ Reservations - specify length of wait

☐ Vehicle condition

☐ Other

7) On a scale of 1 to 10 (10 being most satisfied) rate the transportation you have been receiving.

_____

8) What does transportation mean to you? (Permission granted by _____ for use in publications.)

Additional Comments:

_____

_____

_____

_____

Contractor Survey

_____County

Not applicable in Taylor County.

Contractor name (optional)

1. Do the riders/beneficiaries call your facility directly to cancel a trip?

   ☐ Yes ☐ No

2. Do the riders/beneficiaries call your facility directly to issue a complaint?

   ☐ Yes ☐ No

3. Do you have a toll-free phone number for a rider/beneficiary to issue commendations and/or complaints posted on the interior of all vehicles that are used to transport TD riders?

   ☐ Yes ☐ No

   If yes, is the phone number posted the CTC's?

   ☐ Yes ☐ No

4. Are the invoices you send to the CTC paid in a timely manner?

   ☐ Yes ☐ No

5. Does the CTC give your facility adequate time to report statistics?

   ☐ Yes ☐ No

6. Have you experienced any problems with the CTC?

   ☐ Yes ☐ No

   If yes, what type of problems?

Comments:

PURCHASING AGENCY SURVEY

Staff making call: Melody Cox
Purchasing Agency name: Taylor County Board of Commissioners
Representative of Purchasing Agency: Jay Taylor

1) Do you purchase transportation from the coordinated system?

☒ YES

☐ NO If no, why?

2) Which transportation operator provides services to your clients?

Big Bend Transit provides transportation for the Taylor County Veterans to the VA Hospital in Lake City and the VA medical facility in Tallahassee. Big Bend Transit also provides transportation to the Special Needs Adult Program (SNAP) and Special Olympics participants practices and local activities.

3) What is the primary purpose of purchasing transportation for your clients?

☒ Medical

☐ Employment

☒ Education/Training/Day Care

☐ Nutritional

☐ Life Sustaining/Other

4) On average, how often do your clients use the transportation system?

☐ 7 Days/Week

☐ 1-3 Times/Month

☐ 1-2 Times/Week

☐ Less than 1 Time/Month

☒ 3-5 Times/Week

5) Have you had any unresolved problems with the coordinated transportation system?

- ☐ Yes
- ☒ No If no, skip to question 7

6) What type of problems have you had with the coordinated system?

- ☐ Advance notice requirement [specify operator (s)]
- ☐ Cost [specify operator (s)]
- ☐ Service area limits [specify operator (s)]
- ☐ Pick up times not convenient [specify operator (s)]
- ☐ Vehicle condition [specify operator (s)]
- ☐ Lack of passenger assistance [specify operator (s)]
- ☐ Accessibility concerns [specify operator (s)]
- ☐ Complaints about drivers [specify operator (s)]
- ☐ Complaints about timeliness [specify operator (s)]
- ☐ Length of wait for reservations [specify operator (s)]
- ☐ Other [specify operator (s)] There were no problems this review period.

7) Overall, are you satisfied with the transportation you have purchased for your clients?

- ☒ Yes
- ☐ No If no, why? _____

Level of Cost
Worksheet 1

Insert Cost page from the AOR.

FLCTD
Annual Operations Report
Section I: Face Sheet

County: **Taylor**	Fiscal Year: **July 1, 2015 - June 30, 2016**
Status: Submitted to FLCTD	
Report Date:	09/08/2016
Period Covered:	July 1, 2015 - June 30, 2016
Coordinator's Name:	Big Bend Transit, Inc.
Address:	Post Office Box 1721
City:	Tallahassee
Zip Code:	32302
Service Area:	Taylor
Contact Person:	Shawn Mitchell
Title:	General Manager
Phone:	(850) 574 - 6266
Fax:	(850) 574 - 1531
Email:	smitchell@bigbendtransit.org
Network Type:	Sole Source
Organization Type:	Private Non-Profit

CTC Certification:

I, SHAWN MITCHELL, as the authorized Community Transportation Coordinator (CTC) Representative, hereby certify, under the penalties of perjury as stated in Chapter 837.06, F.S., that the information contained in this report is true, accurate, and in accordance with the accompanying instructions.

CTC Representative (signature)

_____

LCB Statement:

I,_____, as the local Coordinating Board Chairperson, hereby, certify in accordance with Rule 41-2.007(7) F.S. that the local Coordinating Board has reviewed this report and the Planning Agency has received a copy.

LCB Signature

_____

FLCTD
Annual Operations Report
Section II: General Info

County: **Taylor** Fiscal Year: **July 1, 2015 - June 30, 2016**

Status: Submitted to FLCTD

Section II: Coordinated System General Information

1. Provider Listing (include the CTC, if the CTC provides transportation services)

Number of Private Non-Profits: 1

Number of Private For-Profits: 0

Public Entities:

School Board: 0

Municipality: 0

County: 0

Transit Authority: 0

Other: 0

Total: 1

2. How many of the providers listed in 1 are coordination contractors?

0

FLCTD
Annual Operations Report
Section III: Passenger Trip Info

County: **Taylor**		Fiscal Year: **July 1, 2015 - June 30, 2016**	
Status: Submitted to FLCTD			
Section III: Passenger Trip Information			
1a. One-Way Passenger Trips			
Type of Service	**Service Area**		
Fixed Route/Fixed Schedule	**Within**	**Outside**	**Total**
Daily Trip Tickets	0	0	0
Weekly Passes	0	0	0
Monthly Passes	0	0	0
Deviated Fixed Route Service	0	0	0
Paratransit			
Ambulatory	6277	855	7132
Non-Ambulatory	2399	186	2585
Stretcher	0	0	0
Other Services			
School Board Trips	0	0	0
Total Trips	8676	1041	9717
1b. How many of the total trips were provided by contracted transportation providers (do not include the CTC, if the CTC provides transportation services)?			0
1c. How many of the total trips were provided by coordination contractors?			0
2. One-Way Trips by Funding Source			
Agency for Health Care Administration			3560
Agency for Persons with Disabilities			0
Agency for Workforce Innovation			0
Commission for the Transportation Disadvantaged			5859
Department of Children and Families			0
Department of Community Affairs			0
Department of Education			0
Department of Elder Affairs			0
Department of Health			2

Department of Juvenile Justice	0
Florida Department of Transportation	0
Local Government	0
Local Non-Government	296
Other Federal Programs	0
Total:	9717
3. One-Way Trips by Passenger Type	
Was this information obtained by sampling?	yes
Elderly	
Low Income:	4367
Disabled:	12
Low Income and Disabled:	1468
Other:	100
Children	
Low Income:	4
Disabled:	0
Low Income and Disabled:	0
Other:	96
Other	
Low Income:	1517
Disabled:	6
Low Income and Disabled:	578
Other:	1569
Total:	9717
4. One-Way Passenger Trips - by Purpose	
Was this information obtained by sampling?	yes
Medical Purpose	4635
Employment Purpose	645
Education/Training/Daycare Purpose	10
Nutritional Purpose	2
Life-Sustaining/Other Purpose	4425
Total:	9717
5. Unduplicated Passenger Head Count	
5a. Paratransit/Deviated Fixed Route/ School Brd	304

5b. Fixed Route	0
Total:	304
6. Number of Unmet Trip Requests	0
Unmet Trip Requests by Type of Trip	
Unmet Medical	0
Unmet Employment	0
Unmet Education/Training/Daycare	0
Unmet Nutritional	0
Unmet Life-Sustaining/Other	0
Reason Trip was Denied (Optional)	
Lack of Funding:	0
Lack of Vehicle Availability:	0
Lack of Driver Availability:	0
Other:	0
7.) Number of Passenger No-shows	227
Passenger No-Shows by Funding Source (optional)	
CTD:	0
AHCA:	0
AWI:	0
DCF:	0
APD:	0
DOE:	0
DOEA:	0
Other:	0
8. Complaints	
Complaints by Service	0
Complaints by Policy	0
Complaints by Vehicle	0
Complaints by Other	0
Complaint Total:	0
9. Commendations	
Commendations by CTC	0

Commendations by Transportation Providers	0
Commendations by Coordination Contractors	0
Total Commendations:	0

FLCTD
Annual Operations Report
Section IV: Vehicle Info

County: **Taylor**		Fiscal Year: **July 1, 2015 - June 30, 2016**	
Status: Submitted to FLCTD			
Section IV: Vehicle Information			
1. Mileage Information			
	Vehicle Miles		**Revenue Miles**
CTC:	183752		146364
Transportation Providers:	0		0
Coordination Contractors:	0		0
School Bus Utilization Agreement:	0		0
Total:	183752		146364
2. Roadcalls	3		
3. Accidents			
	Chargeable		**Non-Chargeable**
Total Accidents Person Only:	0		0
Total Accidents Vehicle Only:	0		0
Total Accidents Person & Vehicle:	0		0
Total Accidents:	0		0
Grand Total:	0		
4. Total Number of Vehicles	9		
		Count	**Percentage**
a. Total vehicles that are wheelchair accessible:		9	100.00%
b. Total vehicles that are stretcher equipped:		0	0.00%

FLCTD
Annual Operations Report
Section V: Employee Info

County: **Taylor**		Fiscal Year: **July 1, 2015 - June 30, 2016**	
Status: Submitted to FLCTD			
Section V: Employee Information			
1. CTC and Transportation Provider Employee Information			
			Hours
Full-Time Drivers	4		7488
Part-Time Drivers	0		0
Volunteer Drivers	0		0
		Total Hours:	7488
Maintenance Employees	3		
Dispatchers	1		
Schedulers	1		
Call Intake/Reserv./Cust. Serv.	1		
Other Operations Employees	0		
			Hours
Other Volunteers	0		0
Administrative Support	2		
Management Employees	4		
Total	16		
2. Coordination Contractors Employee Information			
			Hours
Full-Time Drivers	0		0
Part-Time Drivers	0		0
Volunteer Drivers	0		0
		Total Hours:	0
Maintenance Employees	0		
Dispatchers	0		
Schedulers	0		
Call Intake/Reserv./Cust. Serv.	0		

Other Operations Employees	0		
			Hours
Other Volunteers	0		0
Administrative Support	0		
Management Employees	0		
Total	0		
		TOTAL HOURS:	7488

FLCTD
Annual Operations Report
Section VI: Revenue Sources

County: **Taylor**		Fiscal Year: **July 1, 2015 - June 30, 2016**	
Status: Submitted to FLCTD			
Section VI: Financial Data			
1. Detailed Revenue and Trips Provided by Funding Source			
Revenue Source	**CTC and Transportation Providers**	**Coordination Contractors**	**TOTAL REVENUES**
Agency for Health Care Administration			
Medicaid Non-Emergency	$153,655.00	$0.00	$153,655.00
Medicaid Non-Emergency (under fixed fee service with AHCA)	$0.00	$0.00	$0.00
Agency for Persons with Disabilities			
Comm Care for Dis Adults/Aging & Adult Services	$0.00	$0.00	$0.00
Developmental Services	$0.00	$0.00	$0.00
Other (specify)	$0.00	$0.00	$0.00
Agency for Workforce Innovation			
WAGES/Workforce Board	$0.00	$0.00	$0.00
Other (specify)	$0.00	$0.00	$0.00
Commission for the Transportation Disadvantaged			
Non-Sponsored Trip Program	$247,187.00	$0.00	$247,187.00
Non-Sponsored Cap. Equip.	$1,260.00	$0.00	$1,260.00
Rural Capital Equip.	$0.00	$0.00	$0.00
TD Other (specify)	$0.00	$0.00	$0.00
Department of Children and Families			
Alcohol, Drug Abuse & Mental Health Program	$0.00	$0.00	$0.00
Family Safety & Preservation	$0.00	$0.00	$0.00
Other (specify)	$0.00	$0.00	$0.00
Department of Community Affairs			
Community Services	$0.00	$0.00	$0.00
Other (specify)	$0.00	$0.00	$0.00
Department of Education			
Carl Perkins Vocational Ed. Act	$0.00	$0.00	$0.00
Division of Blind Services	$0.00	$0.00	$0.00

Vocational Rehabilitation	$0.00	$0.00	$0.00
Day Care Programs	$0.00	$0.00	$0.00
Other (specify)	$0.00	$0.00	$0.00
Department of Elder Affairs			
Older Americans Act	$0.00	$0.00	$0.00
Community Care for the Elderly	$0.00	$0.00	$0.00
Other (specify)	$0.00	$0.00	$0.00
Department of Health			
Children's Medical Services	$0.00	$0.00	$0.00
Office of Disability Deter.	$142.00	$0.00	$142.00
County Public Health Unit	$0.00	$0.00	$0.00
Other (specify)	$0.00	$0.00	$0.00
Department of Juvenile Justice			
(specify)	$0.00	$0.00	$0.00
Department of Transportation			
49 USC 5307 (Section 9)	$0.00	$0.00	$0.00
49 USC 5310 (Section 16)	$165,110.00	$0.00	$165,110.00
49 USC 5311 (Section 18)	$115,149.00	$0.00	$115,149.00
490USC 5311(f) (Section 18i)	$0.00	$0.00	$0.00
Block Grant	$0.00	$0.00	$0.00
Service Development	$1,560.00	$0.00	$1,560.00
Commuter Assistance Program	$0.00	$0.00	$0.00
Other DOT (Specify)	$0.00	$0.00	$0.00
Local Government			
School Board Service	$0.00	$0.00	$0.00
Complementary ADA Service	$0.00	$0.00	$0.00
County Cash	$0.00	$0.00	$0.00
County In-Kind	$0.00	$0.00	$0.00
City Cash	$0.00	$0.00	$0.00
City In-Kind	$0.00	$0.00	$0.00
Other Cash (specify)	$0.00	$0.00	$0.00
Other In-Kind (specify)	$0.00	$0.00	$0.00
Local Non-Government			
Farebox	$17,751.00	$0.00	$17,751.00
Donations, Contributions	$0.00	$0.00	$0.00
In-Kind Services	$0.00	$0.00	$0.00
Other Non-Government	$2,855.00	$0.00	$2,855.00
Other Federal or State Programs			

(specify)	$0.00	$0.00	$0.00
(specify)	$0.00	$0.00	$0.00
(specify)	$0.00	$0.00	$0.00
GRAND TOTAL:	$704,669.00	$0.00	$704,669.00

FLCTD
Annual Operations Report
Section VII: Expense Sources

County: **Taylor**		Fiscal Year: **July 1, 2015 - June 30, 2016**	
Status: Submitted to FLCTD			
Section VII: Financial Data			
2. Expense Sources			
Expense Item	**Community Transportation Coordinator**	**Coordination Contractor**	**TOTAL EXPENSES**
Labor (501):	$205,103.00	$0.00	$205,103.00
Fringe Benefits (502):	$110,735.00	$0.00	$110,735.00
Services (503):	$13,960.00	$0.00	$13,960.00
Materials and Supplies Cons. (504):	$63,497.00	$0.00	$63,497.00
Utilities (505):	$6,063.00	$0.00	$6,063.00
Casualty and Liability (506):	$22,005.00	$0.00	$22,005.00
Taxes (507):	$104.00	$0.00	$104.00
Purchased Transportation Services (508)			
Bus Pass Expenses:	$0.00	$0.00	$0.00
School Bus Expenses:	$0.00	$0.00	$0.00
Other:	$0.00	$0.00	$0.00
Miscellaneous (509):	$19,275.00	$0.00	$19,275.00
Interest (511):	$0.00	$0.00	$0.00
Leases and Rentals (512):	$7,399.00	$0.00	$7,399.00
Annual Depreciation (513):	$42,983.00	$0.00	$42,983.00
Contributed Services (530):	$0.00	$0.00	$0.00
Allocated Indirect Expenses:	$0.00	$0.00	$0.00
GRAND TOTAL:	$491,124.00	$0.00	$491,124.00

Level of Competition
Worksheet 2

1. Inventory of Transportation Operators in the Service Area

	Column A Operators Available	Column B Operators Contracted in the System.	Column C Include Trips	Column D % of all Trips
Private Non-Profit	1		17,947	100%
Private For-Profit				
Government				
Public Transit Agency				
Total	1		17,947	100%

2. How many of the operators are coordination contractors? 0

3. Of the operators included in the local coordinated system, how many have the capability of expanding capacity? N/A

   Does the CTC have the ability to expand? Yes

4. Indicate the date the latest transportation operator was brought into the system. N/A

5. Does the CTC have a competitive procurement process? Yes

6. In the past five (5) years, how many times have the following methods been used in selection of the transportation operators?

	Low bid
	Requests for qualifications
	Negotiation only

	Requests for proposals
	Requests for interested parties

Which of the methods listed on the previous page was used to select the current operators?

Requests for qualifications and low bid. The value of the bid is also taken into consideration. Big Bend Transit is the only operator in Taylor County and currently does not use outside contractors.

7. Which of the following items are incorporated in the review and selection of transportation operators for inclusion in the coordinated system?

x	Capabilities of operator		x	Scope of Work
x	Age of company		x	Safety Program
x	Previous experience		x	Capacity
x	Management		x	Training Program
x	Qualifications of staff		x	Insurance
x	Resources		x	Accident History
x	Economies of Scale		x	Quality
x	Contract Monitoring		x	Community Knowledge
x	Reporting Capabilities		x	Cost of the Contracting Process
x	Financial Strength		x	Price
x	Performance Bond		x	Distribution of Costs
x	Responsiveness to Solicitation			Other: (list)

8. If a competitive bid or request for proposals has been used to select the transportation operators, to how many potential operators was the request distributed in the most recently completed process? 4

How many responded? 1

The request for bids/proposals was distributed:

x Locally x Statewide _____ Nationally

9. Has the CTC reviewed the possibilities of competitively contracting any services other than transportation provision (such as fuel, maintenance, etc…)? Yes

Level of Availability (Coordination)
Worksheet 3

Planning – What are the coordinated plans for transporting the TD population?

CTC provides Advance Reservation (passenger) Intra-County Services, Advance Reservation (group) Intra-County Services, Advance Reservation Inter-County Services, Demand Response Service, Fixed Route Service, Non-Emergency Medical Stretcher Service, and Evacuation Service. BBT also has coordinated with the County on the weekly Veteran's Shuttles to the VA in Lake City and Tallahassee, Special Olympics Transportation Program for participants in the Special Olympics and the Special Needs Adult Program (SNAP). The coordinated plan is addressed in the TDSP.

Public Information – How is public information distributed about transportation services in the community?

BBT distributes a Coordinated Transportation System of Taylor County brochure throughout the County. The "in-town" shuttle schedule is also distributed throughout the County at the Taylor County Administrative Complex, Taylor County Public Library, Taylor County Health Department, Veteran's Service Office, and the VA Clinic. The Health Department provides assistance filling out the Beneficiary Qualification Form. The County holds two public meetings annually to educate the public on the local TD program. The quarterly LCB meetings are also advertised to the public in the local paper and the local newspaper runs several articles a year about the program.

Certification – How are individual certifications and registrations coordinated for local TD transportation services?

BBT has a Beneficiary Qualification Form to determine eligibility of rider eligibility. Qualified beneficiaries receive a Transportation Service Letter and information on beneficiary rights, responsibilities and trip information. For general public reservations, riders must provide the scheduling personnel at BBT their name, phone number, origin and destination. BBT utilized CTS Software to coordinate transportation scheduling and beneficiary information.

Eligibility Records – What system is used to coordinate which individuals are eligible for special transportation services in the community?

BBT requires each individual to fill out Beneficiary Qualification Forms to determine eligibility. Assistance is provided if needed to beneficiaries filling out the form. BBT maintains records on beneficiaries and CTS Software is used to assist with the maintenance of records and scheduling.

Call Intake – To what extent is transportation coordinated to ensure that a user can reach a Reservationist on the first call?

BBT has an on-site experienced Transportation Manager in the paratransit and transportation business. In addition to the Manager, BBT has staff specifically for call intake, reservations, customer service scheduling and dispatch.

Reservations – What is the reservation process? How is the duplication of a reservation prevented?

See attached Page 56A. The Reservation Process is included in the TDSP. Applicable pages from the TDSP are an attachment to the evaluation.

Trip Allocation – How is the allocation of trip requests to providers coordinated?

The process of allocating trips is outlined in the TDSP and is an attachment to the evaluation.

Scheduling – How is the trip assignment to vehicles coordinated?

See attached Page 56A. The Service Plan Section of the TDSP also provides information and is an attachment to the evaluation.

Reservations:

Utilizing CTS Software, Inc. reservations are taken as follows:

1. Customer or Agency representing a Client calls the CTC reservationist to request a trip. Trip request may be advanced day reservation (up to 30 days on advance) and, to a restricted extent, received on the same day. Subscription, standing order/repeat, trips need only be entered once, but are available for cancellation or alteration on any particular day.

2. CTC reservationist enters information pertinent to passenger registration into the system at this time, or in the case of a registered passenger, retrieves the passenger in the system by name or identification number. The reservationist questions the passenger for specific trip information, including day, time(s), origin, destination, one-way/roundtrip, and special instructions/conditions surrounding the trip. Upon completion of the reservation (entry into the system), the reservationist tells the passenger the time of earliest pick-up and the fare to be paid (if applicable), and gives the passenger a confirmation number which includes the date of the reservation and the time of the reservation was taken. Passenger eligibility for the trip requested, including Medicaid eligibility and qualification, is accomplished at the time the trip is reserved.

Scheduling:

Utilizing CTS Software Inc. trips are coordinated as follows:

1. Trips for the following day are scheduled to the appropriate driver/vehicle or assigned to the appropriate carrier.

2. Driver manifests and carrier assignments are generated by the system and distributed. Service is provided, to the extent possible, in accordance with the information on the manifest, with the driver/carrier entering actual pickup time and odometer reading, actual arrival time and odometer reading, and trip status code (completed, no-show, canceled, etc.) for each trip.

3. Completed driver manifests/carrier schedules are returned to the CTC, and vehicle and trip data is reconciled for accuracy and completeness.

4. Actual driver, vehicle and trip information is entered into the system. Each trip is brought up onto the computer screen and the is validated on things such as which passenger rode, cancelled, no-showed, or was not ready, pickup time, arrival time, and odometer readings. A second screen is used to capture vital trip information such as driver, vehicle beginning and ending odometer reading of the trip, driver times, and other information.

5. The validated system trip database is then used to generate the required agency invoices and reports, and carrier summaries.

6. Invoices and reports are forwarded to the appropriate agency or carrier.

Transport – How are the actual transportation services and modes of transportation coordinated?

See attached Page 56A. The TDSP also provides the information and is an attachment to the evaluation. It should be noted BBT does not use outside contractors to provide transportation services at this time.

Dispatching – How is the real time communication and direction of drivers coordinated?

See attached Page 56A. The Service Plan Section of the TDSP also provides this information and is an attachment to the evaluation.

General Service Monitoring – How is the overseeing of transportation operators coordinated?

See attached Page 56A. The Service Plan Section of the TDSP also provides this information and is an attachment to the evaluation.

Daily Service Monitoring – How are real-time resolutions to trip problems coordinated?

This is outlined in the TDSP and the applicable pages are an attachment to the evaluation.

Trip Reconciliation – How is the confirmation of official trips coordinated?

Trips are confirmed through the use of CTS Software. See attached Page 56A for additional information. The Service Section of the TDSP also provides Trip Reconciliation information and is an attachment to the evaluation.

Billing – How is the process for requesting and processing fares, payments, and reimbursements coordinated?

See the Scheduling section of attached Page 56A.

Reporting – How is operating information reported, compiled, and examined?

See the Scheduling section of attached Page 56A.

Cost Resources – How are costs shared between the coordinator and the operators (s) in order to reduce the overall costs of the coordinated program?

The CTC does not use outside operators at this time, however through the use of CTS Software, the coordinator schedules trips to ensure for the most cost effective use of funds.

Information Resources – How is information shared with other organizations to ensure smooth service provision and increased service provision?

Big Bend Transit submits quarterly reports to the LCB for review. The quarterly reports are forwarded to the TD Commission in the Planning Grant quarterly reports. The information is also provided to the TD Commission in the Annual Operations Reports (AOR). The TD Commission and the LCB also approves the CTC Rate Model Sheets at a minimum of annually. The annual public hearing conducted by the LCB is also an excellent resource for sharing information with the public. The local newspaper also runs several articles each year about the local transportation disadvantaged programs.

Overall – What type of formal agreement does the CTC have with organizations, which provide transportation in the community?

The CTC has a MOA with the TD Commission and the CTC Rate Model Sheets are approved annually by the TD Commission and the LCB. The CTC does not use outside operators at this time.

ATTACHMENT A

Big Bend Transit, Inc.

P.O. Box 1721
Tallahassee, Florida 32302
850/574-6266

Complaint/Commendation Form

Date Called In: _____ Time Called In: _____

Incident Called In By: _____ Telephone: _____

Date Of Incident: _____ Time Of Incident: _____

Does Complainant Wish To Be Notified Of Investigative Findings?
_____ Yes _____ No

Was Complainant Informed That There Is Also A Grievance Process Available?
_____ Yes _____ No

Did Complainant Request A Copy Of The Grievance Policy?
_____ Yes _____ No
If Yes, Address sent To: _____
_____

Nature Of Incident:

_____ Timeliness
_____ Vehicle Condition
_____ Vehicle Operation
_____ Other: _____
_____
_____

_____ Customer Service
_____ Poor Route Selection
_____ Trip Scheduling

Incident: _____

_____

_____

_____

_____

_____

_____

_____

_____

_____

_____

Incident Recorded By: _____

Findings: _____

_____

_____

_____

_____

_____

_____

_____

_____

_____

_____

By: _____ Date: _____

Disposition: _____

_____

_____

_____

_____

_____

_____

_____

_____

_____

_____

Authorized By: _____ Date: _____

incident(wdw1)

ATTACHMENT B

Transportation Service Information:

- The driver will assist you in boarding the van, if necessary.
- Drivers will wait five minutes for you.
- You must use the seatbelt provided.
- Child car seats will not be provided.
- You must have the ability to carry your own personal items. Personal items are to be limited to (2) bags or what you alone can carry.
- Return trips will be made within an hour and a half of the requested time.
- No smoking, eating or drinking on the vehicle.
- Advanced purchase of coupons/tokens is available.
- Accessible formats are available upon requests.

Go to our website to learn what else Big Bend Transit offers in your county:

www.bigbendtransit.org

Perry SHUTTLE

Florida Law and Title VI of the Civil Rights Act of 1964 prohibits discrimination in public accommodation on the basis of race, color, religion, sex, national origin, handicap, or of marital status. Persons believing they have been discriminated against on these conditions may file a complaint with the Florida Commission on Human Relations at 850-488-7082 or 800-342-8170 (voice messaging)

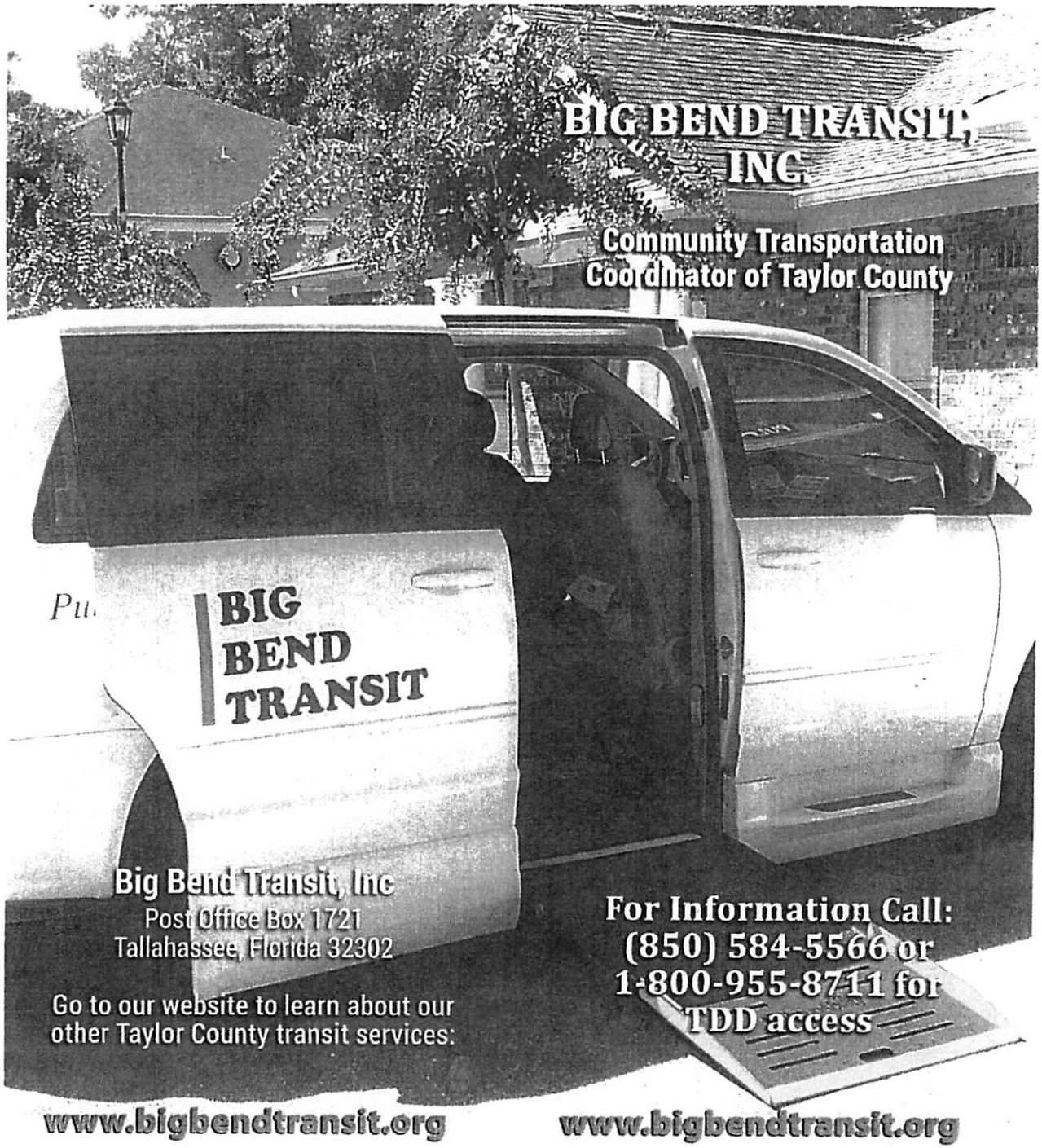

Perry SHUTTLE

The Perry Shuttle fare is $1/trip. Discounted multi-trip passes are also available.

To plan your trip, identify the stop nearest your home on the map. Use that number to find the arrival & departure times on the chart.

For assistance, please call Big Bend Transit at (850) 584-5566 or visit www.bigbendtransit.org

1 **Super Wash** *1403 Hampton Spring Road*	7:30 am	8:30 am	9:30 am	10:30 am	11:30 am	12:30 pm	1:30 pm	2:30 pm	3:30 pm	4:30 pm	5:30 pm
2 **Tidewater Apartments** *500 S. Warner Avenue*	7:35 am	8:35 am	9:35 am	10:35 am	11:35 am		1:35 pm	2:35 pm	3:35 pm	4:35 pm	5:35 pm
3 **TCLC Jerkins** *1201 Martin Luther King Avenue*	7:39 am	8:39 am	9:39 am	10:39 am	11:39 am		1:39 pm	2:39 pm	3:30 pm	4:39 pm	5:39 pm
4 **Exxon Station** *1203 Byron Butler Parkway*	7:41 am	8:41 am	9:41 am	10:41 am	11:41 am		1:41 pm	2:41 pm	3:41 pm	4:41 pm	5:41 pm
5 **Woodridge Apartments** *709 W. Church Street*	7:45 am	8:45 am	9:45 am	10:45 am	11:45 am		1:45 pm	2:45 pm	3:45 pm	4:45 pm	5:45 pm
6 **Family Dollar** *1503 S. Jefferson Street*	7:48 am	8:48 am	9:48 am	10:48 am	11:48 am		1:48 pm	2:48 pm	3:48 pm	4:48 pm	5:48 pm
7 **Kmart** *1809 S. Byron Butler Parkway*	7:50 am	8:50 am	9:50 am	10:50 am	11:50 am		1:50 pm	2:50 pm	3:50 pm	4:30 pm	5:50 pm
8 **Winn Dixie** *2057 S. Byron Butler Parkway*	7:52 am	8:52 am	9:52 am	10:52 am	11:52 am		1:52 pm	2:52 pm	3:52 pm	4:52 pm	5:52 pm
9 **Southern Villas** *315 Puckett Road*	7:54 am	8:54 am	9:54 am	10:54 am	11:54 am		1:54 pm	2:54 pm	3:54 pm	4:54 pm	
10 **Pineview Apartments** *427 Puckett Road*	7:55 am	8:55 am	9:55 am	10:55 am	11:55 am		1:55 pm	2:55 pm	3:55 pm	4:55 pm	
11 **Stonegate Manor** *544 Puckett Road*	7:56 am	8:56 am	9:56 am	10:56 am	11:56 am		1:56 pm	2:56 pm	3:56 pm	4:56 pm	
12 **Taylor Tech** *3233 S. Byron Butler Parkway*	7:59 am	8:59 am	9:59 am	10:59 am	11:59 am		1:59 pm	2:59 pm	3:59 pm	4:59 pm	
13 **BP Station** *2410 Byron Butler Parkway*	8:01 am	9:01 am	10:01 am	11:01 am	12:01 pm		2:01 pm	3:01 pm	4:01 pm	5:01 pm	
14 **Dollar General** *2028 S. Jefferson Street*	8:06 am	9:06 am	10:06 am	11:06 am	12:06 pm		2:06 pm	3:06 pm	4:06 pm	5:06 pm	
15 **Walmart** *1900 S. Jefferson Street*	8:07 am	9:07 am	10:07 am	11:07 am	12:07 pm		2:07 pm	3:07 pm	4:07 pm	5:07 pm	
16 **Post Office** *1600 S. Jefferson Street*	8:09 am	9:09 am	10:09 am	11:09 am	12:09 pm		2:09 pm	3:09 pm	4:09 pm	5:09 pm	
17 **County Courthouse** *108 N. Jefferson Street*	8:13 am	9:13 am	10:13 am	11:13 am	12:13 pm		2:13 pm	3:13 pm	4:13 pm	5:13 pm	
18 **Public Library** *403 N. Washington Street*	8:15 am	9:15 am	10:15 am	11:15 am	12:15 pm		2:15 pm	3:15 pm	4:15 pm	5:15 pm	
19 **Even Start** *508 N. Aquanaldo Avenue*	8:18 am	9:18 am	10:18 am	11:18 am	12:18 pm		2:18 pm	3:18 pm	4:18 pm	5:18 pm	
20 **Health Department** *1215 N. Peacock Avenue*	8:20 am	9:20 am	10:20 am	11:20 am	12:20 pm		2:20 pm	3:20 pm	4:20 pm	5:20 pm	
21 **Taylor Veterans Administration** *1224 N. Peacock Avenue*	8:21 am	9:21 am	10:21 am	11:21 am	12:21 pm		2:21 pm	3:21 pm	4:21 pm	5:21 pm	
22 **Medical Offices** *315 E. Ash Street*	8:22 am	9:22 am	10:22 am	11:22 am	12:22 pm		2:22 pm	3:22 pm	4:22 pm	5:22 pm	
23 **Taylor Senior Services** *800 Wash Street*	8:23 am	9:23 am	10:23 am	11:23 am	12:23 pm		2:23 pm	3:23 pm	4:23 pm	5:23 pm	
24 **DMH Plaza** *555 N. Byron Butler Parkway*	8:25 am	9:25 am	10:25 am	11:25 am	12:25 pm		2:25 pm	3:25 pm	4:25 pm	5:25 pm	
25 **Doctors Memorial Hospital** *333 N. Byron Butler Parkway*	8:26 am	9:26 am	10:26 am	11:26 am	12:26 pm		2:26 pm	3:26 pm	4:26 pm	5:26 pm	

Next departure after this stop is 1:30 pm.

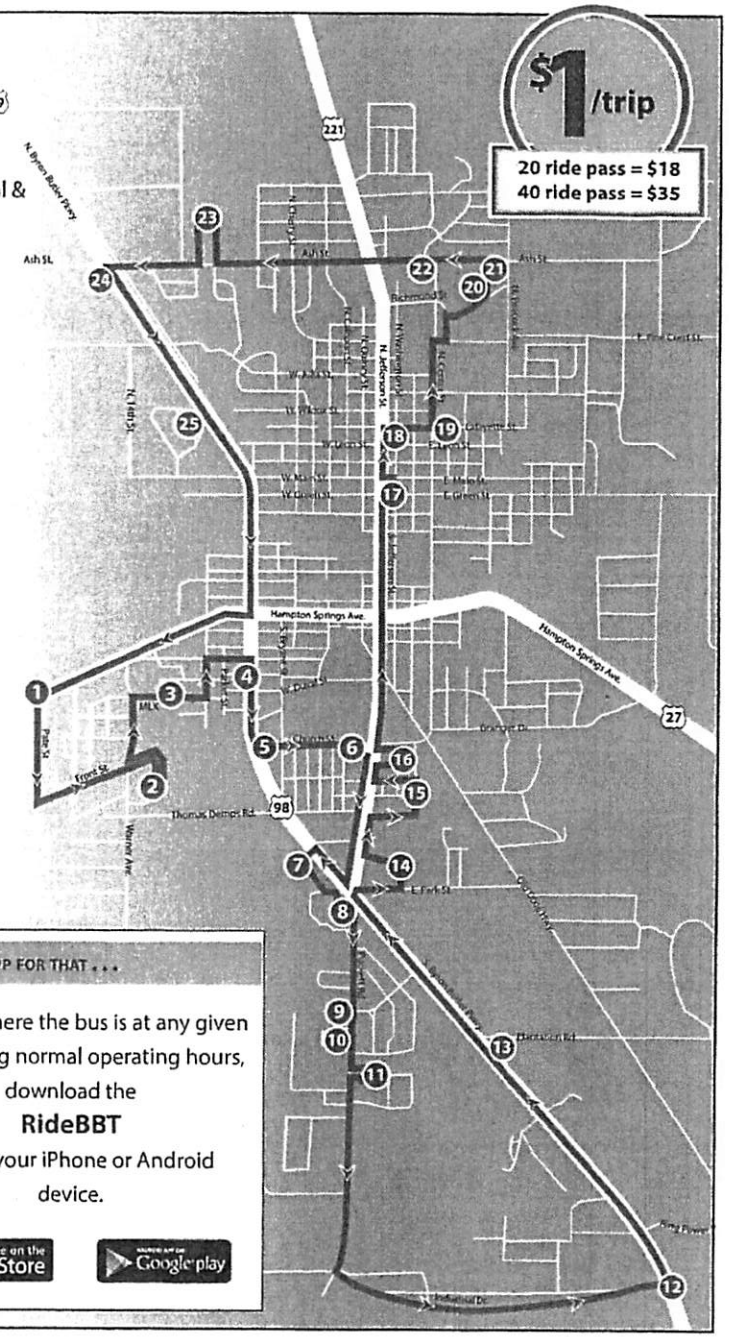

THERE'S AN APP FOR THAT . . .

To track where the bus is at any given time during normal operating hours, download the **RideBBT** app to your iPhone or Android device.

Available on the App Store

Google play

ATTACHMENT C

APPLICATION FORM
TRANSPORTATION DISADVANTAGED TRUST FUND
Coordinated Transportation System of Taylor County
(850) 584-5566

_____
Applicant's Last Name First Name MI

_____
Street Address City Zip Code

_____
Mailing Address, if different City Zip Code

__ __ __-__ __-__ __ __ __ __ __/__ __/__ __ (_____)_____
Social Security Number Date of Birth Telephone Number

****

DESCRIPTION OF ELIGIBILITY STATUS (check all that apply)

__ Mobility Aid required, if checked, which type?

__ Manual wheelchair __ Powered Wheelchair __ Oversized/wide/geri-chair
__ Can transfer into a regular passenger seat
__ Cane __ Walker __ Crutches

__ Totally blind __ Legally blind
__ Guide dog

__ Totally deaf __ Severely hearing impaired

__ Mental disability, if checked are you able to:

Give your address and telephone number upon request? __yes __no
Deal with unexpected situations or changes in routine? __yes __no
Ask for, understand and follow instructions? __yes __no

Do you or anyone who lives with you have a vehicle? __yes __no

Can you afford to purchase transportation? __yes __no

Are you eligible for AFDC, food stamps or Medicaid? __yes __no

To travel, do you need a personal care escort? __always __sometimes __no

Explain "always" or "sometimes" _____

Signature of Applicant _____
(may be custodian, parent, guardian)

Date _____

Mail completed form to: Big Bend Transit, Inc.
Post Office Box 1721
Tallahassee, Florida 32302

(revised01/07/03)appform(dw26)

ATTACHMENT D

Annual Grant Self Certification

Certifying compliance with United States Code Section 5309, 5310, 5311/ARRA, 5316, 5317, and 5339 Programs to the Florida Department of Transportation

Certification Date (Current): 2017
Certification Year: (Previous): 2016
Name and Address of Bus Transit System: Big Bend Transit, Inc. 2201 Eisenhower Street Tallahassee, Florida 32302

The Bus Transit System (Agency) named above hereby certifies the following:

1. *The grant funded vehicles continue to be used for the purpose for which the grants were awarded.*

2. *The vehicles have not been sold, damaged or otherwise taken out of service. The Agency has notified the Department of all accidents and casualties within 24 hours of such events.*

3. *The Agency carries adequate insurance to maintain, repair, or replace the vehicles and equipment in the event of loss or damage due to an accident or casualty.*

4. *The Agency's Preventative Maintenance Plan is current and the agency is in compliance with the Plan. The vehicles and equipment are maintained in good working condition. Annual vehicle and wheelchair safety inspections have been performed on all operational buses.*

Blue Ink Signature: _____ ***Date:*** 1/13/2017
(Individual responsible for assurance of compliance)

Name: Shawn Mitchell *Title:* General Manager

Name and address of entity(ies) which has (have) performed bus safety inspections:

Name: Domingo Ortiz

Address: 2201 Eisenhower Street Tallahassee, Florida 32302

Name of qualified mechanic who performed annual inspections: Domingo Ortiz

Name and address of entity(ies) which has (have) performed wheelchair inspections:

Name: Domingo Ortiz

Address: 2201 Eisenhower Street Tallahassee, Florida 32302

Name of qualified mechanic who performed annual inspections: Domingo Ortiz

STATE OF FLORIDA DEPARTMENT OF TRANSPORTATION

725-030-10
TRANSIT
12/01

CERTIFICATE OF COMPLIANCE

for a
SECTION 5311 SUBRECIPIENT
(Certifying compliance with 49 CFR Parts 40, 655)
To
Florida Department of Transportation

DATE 1/13/2017

Section 5311 Subrecipient Information:	FDOT District Office Information:
AGENCY NAME: Big Bend Transit, Inc.	NAME: Doreen Joyner-Howard, AICP
ADDRESS: 2201 Eisenhowser Street	ADDRESS: 2198 Edison Avenue, Jacksonville, FL
PHONE: 850-574-6266	PHONE: 904-360-5650

I, Shawn Mitchell (Name), General Manager (Title)

hereby certify that Big Bend Transit, Inc (Name of Subrecepient) and its applicable

contractor(s) (listing attached hereto) for NA (Name of Subrecepient)

has (have) established and implemented an anti-drug and alcohol misuse prevention program in accordance with the provisions of 49 CFR Parts 40 and 655 as amended. I further certify that the employee training conducted under this part meets the requirements of 49 CFR Parts 40 and 655 as amended.

Signature

Attachment: (Applicable Contractor(s) - Name, Address, Phone #, Contact Person)

Bus Transit System Annual Safety and Security Certification

Certifying Compliance with Rule 14-90, FAC to the
Florida Department of Transportation (FDOT)

Certification Date (Current): 2016
Certification Year: (Previous): 2015
Name and Address of Bus Transit System: Big Bend Transit, Inc. 2201 Eisenhower Street Tallahassee, Florida 32302

The Bus Transit System (Agency) named above hereby certifies the following:

1. *The Agency has adopted a System Safety Program Plan (SSPP) and a Security Program Plan (SPP) pursuant to the standards set forth in Rule Chapter 14-90, Florida Administrative Code.*

2. *The Agency is in compliance with its adopted SSPP and SPP.*

3. *The Agency has performed annual safety inspections on all operational vehicles in accordance with Rule Chapter 14-90, Florida Administrative Code.*

4. *The Agency has conducted reviews of SSPP and SPP and the plans are up to date.*

*Blue Ink Signature:*_____ *Date:* 1/13/2017
(Individual Responsible for Assurance of Compliance)

Name: Shawn Mitchell *Title:* General Manager

Name and address of entity(ies) which has (have) performed bus safety inspections and security assessments:

Name: Domingo Ortiz

Address: 2201 Eisenhower Street Tallahassee, Florida 32302____

Name of Qualified Mechanic who Performed Annual Inspections: Domingo Ortiz

ATTACHMENT E

BIG BEND TRANSIT, INC.
Substance Abuse Policy

General Manager Statement

Big Bend Transit, Inc. is dedicated to providing safe, dependable, and economical transportation services to its patrons. Big Bend Transit, Inc. employees are a valuable resource and it is also our goal to provide a safe, healthy and satisfying working environment for our employees. In meeting these goals, it is our policy to:

- Assure that employees are not impaired in their ability to perform assigned duties in a safe, productive, and healthy manner;
- Create a workplace environment free from the adverse effects of drug and alcohol abuse or misuse;
- Prohibit the unlawful manufacture, distribution, dispensing, possession, or use of controlled substances;
- Encourage employees to seek professional assistance when substance abuse adversely affects their ability to perform their assigned duties.

This Substance Abuse Policy implements a drug and alcohol testing program for all safety-sensitive employees. Each employee shall be provided a signed copy of the adopted policy. *Policy items implemented under the authority of Big Bend Transit, Inc. are italicized throughout this policy.* All other policy items are implemented under the authority of the US DOT and/or the Federal Transit Administration.

Per BIG BEND TRANSIT, INC. authority, violation of this substance abuse policy will result in termination of employment and/or exclusion from hire for applicants.

This policy is approved by Big Bend Transit, Inc.'s Board of Directors and is effective on June 30, 2016.

Name: Sharon Mitchell

Title: General Manager

Signature: _____ Date: 6/30/2016

Table of Contents

1. Background
2. Purpose
3. Covered Employees
4. Prohibited Substances
5. Prescription and Over the Counter Medications
6. Employee Protections
7. Employee Responsibility to Notify BBT of Criminal Drug Conviction
8. Employee Training
9. Pre-employment Drug and Alcohol Background Checks
10. Pre-employment Testing
11. Random Testing
12. Reasonable Suspicion Testing
13. Post Accident Testing
14. Refusal to Submit to DOT Required Drug Testing
15. Observed Collections
16. Specimen Analysis
17. Dilute Results
18. Medical Review Officer's Role and Responsibilities
19. Verified Positive Results
20. Cancelled/Invalid Tests
21. Split Specimen Testing
22. Alcohol
23. Alcohol Use and Breath Alcohol Testing Process
24. Refusal to Submit to DOT Required Alcohol Testing
25. System Contacts and Substance Abuse Assistance Resources
26. Addendum to Substance Abuse Policy

1. **Background**

Pursuant to the Omnibus Transportation Employee Testing Act of 1991, the Federal Transit Administration (FTA) published regulations prohibiting drug use and alcohol misuse by transit employees and required transit agencies to test for prohibited drug use and alcohol misuse. 49 Code of Federal Regulations Part 655, "Prevention of Alcohol Misuse and Prohibited Drug Use in Transit Operations" mandates urine drug testing and breath alcohol testing for all employees in safety-sensitive positions. These regulations prohibit the performance of safety-sensitive functions when there is a positive drug or positive alcohol test result or an employee refuses to submit to DOT required drug or alcohol testing.

In addition, the U.S. Department of Transportation (DOT) has issued 49 CFR Part 40, "Procedures for Transportation Workplace Drug and Alcohol Testing Programs" to provide uniform procedures and standards for conducting drug and alcohol testing programs. The drug and alcohol testing program of BBT will be conducted in accordance with 49 CFR Parts 40 and 655, as amended. Employees may request copies of the applicable regulations by contacting BBT'S designated employer representative listed in Section 25 of this policy.

2. **Purpose**

This policy is established to comply with FTA drug and alcohol testing requirements to ensure employee fitness for duty, and to protect our employees, passengers, and the general public from the risks posed by the use of alcohol and prohibited drugs. This policy is also intended to comply with and incorporate 49 CFR Part 32, The Drug-Free Workplace Act of 1988, which requires the establishment of drug-free workplace policies and the reporting of certain drug-related offenses to the FTA, including the reporting of employees convicted of criminal drug offenses that occur in the workplace.

3. **Covered Employees**

This policy applies to all safety-sensitive transit system employees as identified and described herein. Paid part-time employees and contractors, when performing safety-sensitive duties, are also covered by this policy when performing any BBT related business. This policy applies to off-site lunch periods or breaks when an employee is scheduled to return to work. Additionally, this policy applies to volunteers who perform safety sensitive duties who are required to hold a Commercial Driver's License, or who receive remuneration in excess of his or her actual expenses incurred while engaging in the volunteer activity. This written policy shall be distributed to all employees and applicable volunteers in safety-sensitive positions. Adherence to this policy and its provisions are a condition of employment in a safety sensitive position; per 49 CFR Part 655.

Safety-Sensitive Employees and Applicants for Safety-Sensitive Positions covered by this Policy include those who:

1 Operate a revenue service vehicle, including when not in revenue service
2 Operate a non-revenue service vehicle when such is required to be operated by a holder of a commercial driver's license
3. Control the movement/dispatch of a revenue service vehicle

4. Perform maintenance on a revenue service vehicle or equipment used in revenue service
5. Carry a firearm for security purposes
6. May perform any of the above safety sensitive functions in a supervisory or training role.

This policy is applicable to the following positions within Big Bend Transit, Inc.:

- *Transportation Manager*
- *Operations Assistant*
- *Transit Operator*
- *Maintenance Manager*
- *Lead Mechanic*
- *Mechanic*
- *Maintenance Assistant*
- *Maintenance Clerk*
- *Operations Manager*

4. **Prohibited Substances**

In accordance with US DOT 49 CFR Parts 655 and 40, the following are prohibited substances:

- Cocaine
- Opiates (e.g., heroin, codeine)
- Phencyclidine (PCP)
- Cannabinoids (Marijuana)
- Amphetamines (includes methamphetamine and MDMA- Ecstasy)
- Alcohol Misuse as defined in Section 23, below.

5. **Prescription and Over the Counter Medications**

The appropriate use of legally prescribed drugs and non-prescription medications are not prohibited. A legally prescribed drug means a prescription or other written approval from a physician for the use of a drug by an individual in the course of medical treatment. However, the use of any substance which carries a warning label that indicates mental functioning, motor skills, or judgment may be adversely affected must be reported to supervisory personnel and medical advice must be sought, before performing safety sensitive duties.

The misuse or abuse of legally prescribed drugs is prohibited; this includes the use of medication that is prescribed to another individual as well as illegally obtained prescription drugs.

BBT strongly encourages employees to inform their prescribing physician of the safety-sensitive job functions that they perform, in order to ensure that appropriate medications are prescribed.

6. **Employee Protections**

The procedures that will be used to test for the presence of prohibited substances or misuse of alcohol shall be such that they protect the employee's privacy, the validity of the testing process and the confidentiality of the test results.

All urine drug testing and breath alcohol testing will be conducted in accordance with applicable with 49 CFR Part 40, as amended. All urine specimen collections, analysis and reporting of results shall to be in accordance with 49 CFR Part 40, as amended.

Drug and alcohol testing shall be conducted in a manner that will ensure the highest degree of accuracy and reliability using techniques, equipment, and laboratory facilities which have been approved by the U.S. Department of Health and Human Services (HHS).

Alcohol initial screening tests will be conducted using a National Highway Traffic Safety Administration (NHTSA)-approved Evidential Breath Testing Device (EBT) or non-evidential alcohol screening device that has been approved by NHTSA. Confirmatory tests for alcohol concentration will be conducted utilizing a NHTSA approved EBT.

1 Except as required by law or expressly authorized in this section, BBT shall not release employee information that is contained in records maintained per 49 CFR Part 655.73.

2. An employee may, upon written request, obtain copies of any records pertaining to the employee's use of alcohol or controlled substances, including any records pertaining to his or her alcohol or controlled substances tests.

3. BBT shall release information regarding an employee's records as directed, by the specific written consent of the employee authorizing release of the information to an identified person. Release of such information is permitted only in accordance with the terms of the employee's consent.

4. Records pertaining to a Substance Abuse Professional's evaluation, treatment and follow up testing results shall be made available to a subsequent DOT employer upon receipt of written consent from an employee.

7. **Employee Responsibility to Notify BBT of Criminal Drug Conviction**

It is a violation of this policy for any employee to fail to immediately notify BBT of any criminal drug statute conviction, or a finding of guilt whether or not adjudication is withheld, or the entry into a diversionary program in lieu of prosecution. Violating employee shall be immediately removed from safety sensitive duties.

Per BBT's authority, violation of this substance abuse policy will result in termination of employment.

8. **Employee Training**

Safety-sensitive employees will receive at least 60 minutes of training on the effects and consequences of prohibited drug use on personal health, safety, and the work environment, and on the signs and symptoms that may indicate prohibited drug use.

Supervisors who make reasonable suspicion determinations shall receive at least 60 minutes of training on the physical, behavioral and performance indicators of probable drug use and 60 minutes on the physical, behavioral and performance indicators of probable alcohol use.

9. **Pre-employment Drug and Alcohol Background Checks**

In compliance with 49 CFR Part 40.25, BBT must make a good faith effort to obtain drug and alcohol testing records from prior DOT covered employer(s) for the previous two years for all applicants seeking safety-sensitive positions and all current employees transferring into a safety-sensitive position. BBT will require each applicant/transferee to a safety-sensitive position to complete a written consent that allows the release of drug and alcohol testing information from previous DOT covered employers to BBT. An applicant/transferee who refuses to provide written consent will not be permitted to perform safety-sensitive functions for BBT.

All safety-sensitive applicants who have previously failed a DOT pre-employment test must provide proof that they have completed a Substance Abuse Professional's evaluation, treatment and return to duty process in addition to a pre-employment drug test with negative results, prior to their employment into a safety-sensitive job function. The credentials, training and education of the Substance Abuse Professional must meet the requirements of 49 CFR Part 40 Subpart O.

10. **Pre-Employment Testing**

All safety-sensitive position applicants shall undergo a urine drug test prior to placement in a safety sensitive position. BBT must be in receipt of a negative urine drug test result prior to ***employment for*** a safety sensitive position and/or performance of a safety-sensitive function. A cancelled test result will require an applicant to undergo a subsequent pre-employment urine drug test, until a negative test result can be obtained.

If an applicant's pre-employment urine drug test result is verified as ***positive****, the applicant will be excluded from consideration for employment per BBT authority.* Applicant will be provided a referral to a Substance Abuse Professional meeting the required qualifications per 49 CFR Part 40.281, as amended.

An employee returning from an extended leave period of 90 consecutive days or more, and whose name was removed from the random testing selection pool, will be subject to a pre-employment urine drug test. BBT must be in receipt of a negative drug test result prior to the employee being reinstated to safety sensitive duty.

11. **Random Testing**

Employees in safety-sensitive positions shall be subject to random, unannounced testing. The minimum annual percentage rate for random alcohol testing and the minimum annual percentage rate for random controlled substances testing shall be in accordance with 49 CFR Part 655, as amended. The percentages of testing shall be based on the average number of safety-sensitive employees per calendar year.

The administering of random testing shall be spread reasonably throughout the calendar year and throughout all times of day when safety-sensitive functions are performed. Each covered employee who is notified of selection for random alcohol or drug testing shall immediately proceed to the testing site.

Random alcohol testing shall be conducted on a safety sensitive employee during, just before or just after the performance of a safety-sensitive function.

Random urine drug testing may be conducted anytime while an employee is on duty or on call, or on standby duty.

The selection of employees for random alcohol and drug testing shall be made by a scientifically valid method. The selection process shall provide each covered employee an equal chance of being tested each time selections are made. A computer based random number generator that is fair and equitable for the covered employees shall derive the list.

12. **Reasonable Suspicion Testing**

All safety-sensitive employees are subject to reasonable suspicion urine drug testing and/or breath alcohol testing. Reasonable suspicion testing is required when one or more trained company officials can articulate and substantiate physical, behavioral and performance indicators of probable drug use or alcohol misuse by observing the appearance, behavior, and speech or body odors of the employee. Reasonable suspicion testing for alcohol misuse can only be made when observations leading to that testing occur during, just preceding, or just after the period of the workday that the employee is required to be in compliance with FTA regulations.

13. **Post-Accident Testing**

Fatal Accident: A safety-sensitive employee shall be required to undergo urine drug and breath alcohol testing following an accident involving a revenue service vehicle that results in a fatality (regardless of whether or not the vehicle is in revenue service at the time of the event). Any other employee(s), i.e., maintenance personnel, dispatchers, controllers, whose performance could have contributed to the accident, shall also be tested. As soon as practical following an accident involving the loss of human life, surviving covered employees shall undergo drug and alcohol testing.

Non-Fatal Accident: A post-accident test shall be conducted if an accident results in injuries requiring immediate medical treatment away from the scene, *and/or* if one or more vehicles incurs disabling damage that requires towing from a site; unless BBT determines, using the best information available at the time of the decision, that the employee's performance can be <u>completely discounted</u> as a contributing factor to the

accident. Any other safety sensitive employee whose performance could have contributed to the accident shall be tested. The decision regarding whether or not the employee's performance could have contributed to the accident will be the sole discretion of BBT using the best information available at the time of the decision.
Following an accident, the employee must be "readily available" for testing. Post accident tests will be conducted as soon as possible, all reasonable efforts shall be made to test the safety sensitive employee(s) within (2) two hours of the accident, but not after eight (8) hours for alcohol testing and thirty two (32) hours for drug testing. If a drug or alcohol test required by this section is not administered within the required time period following the accident, BBT shall prepare and maintain on file, a record stating the reasons the testing was not promptly administered and efforts to conduct testing shall cease.

Any safety-sensitive employee involved in an accident must refrain from alcohol use for eight (8) hours following the accident or until the employee undergoes a post-accident alcohol test. Any safety-sensitive employee, who leaves the scene of the accident without a justifiable reason or explanation prior to submitting to drug and alcohol testing, shall be considered to have refused the test.

The post-accident testing requirements shall not delay necessary medical attention for injured persons, nor will they prohibit an employee who was performing a safety-sensitive function from leaving the scene of an accident to obtain assistance in responding to the accident or to obtain necessary emergency medical care.

In the rare event that an employee is unable to submit to a post-accident test within the required time period (i.e., 8 hours for alcohol and 32 hours for drugs) due to circumstances beyond BBT's control, the results of a blood, urine or breath alcohol test conducted by a federal, state or local official having independent authority for the test, will be considered to meet the requirements for a post-accident test. The test must conform to the applicable federal, state, or local testing requirements and the results must be obtained by BBT. (Per 49 CFR Part 655.44)

14. **Refusal to Submit to Urine Drug Testing**
All safety-sensitive employees will be subject to urine drug testing and breath alcohol testing as described in sections 10-13. An employee who fails to cooperate with the testing process or attempts to thwart the testing process will be considered to have "refused testing". Refusal to submit to DOT required testing is a violation of this substance abuse policy.

Per BBT authority, violation of this substance abuse policy will result in termination of employment.

The following actions constitute a "refusal to test" in accordance with 49 CFR Part 40, as amended:

(1) Failure to appear for any test within a reasonable time, as determined by the employer, consistent with applicable DOT agency regulations, after being directed to do so by the employer (pre-employment testing not applicable).

(2) Failure to remain at the testing site until the testing process is completed (after the process has been started)
(3) Failure to provide a urine specimen for any drug test required by this part or DOT agency regulations
(4) In the case of a directly observed or monitored collection in a drug test, fail to permit the observation or monitoring of your provision of a specimen
(5) Failure to provide a sufficient amount of urine when directed, and it has been determined, through a required medical evaluation, that there was no adequate medical explanation for the failure
(6) Failure or decline to take an additional drug test the employer or collector has directed you to take
(7) Failure to undergo a medical examination or evaluation, as directed by the MRO as part of the verification process, or as directed by BBT
(8) Failure to cooperate with any part of the testing process (e.g., refuse to empty pockets when directed by the collector, behave in a confrontational way that disrupts the collection process, fail to wash hands after being directed to do so by the collector).
(9) Adulteration or substitution of a urine specimen that you provided.
(10) For an observed collection, failure to follow the observer's instructions to raise your clothing above the waist, lower clothing and underpants, and to turn around to permit the observer to determine if you have any type of prosthetic or other device that could be used to interfere with the collection process.
(11) Possessing or wearing a prosthetic or other device that could be used to interfere with the collection process.
(12) Admitting to the collector or MRO that you adulterated or substituted the specimen.

Refusals to test will result in employee's immediate removal from safety sensitive duties and a referral to a Substance Abuse Professional that has knowledge of and clinical experience in the diagnosis and treatment of alcohol and controlled substances-related disorders, and who meets the qualifications outlined in 49 CFR Part 40.281 Subpart O.

15. Observed Urine Drug Collections

During an observed collection, the employee who is being observed will be required to raise his or her shirt, blouse, or dress/skirt, as appropriate, above the waist; and lower clothing and underpants to show the collector, by turning around, that they do not have a prosthetic device. The collector/observer must witness the employee's urine leave the body and enter the collection cup. The collector/observer must be the same gender as the employee being observed

Observed collections are required in the following circumstances:

- Anytime the employee is directed to provide another specimen because the temperature on the original specimen was out of the accepted temperature range of 90°F - 100°F;
- Anytime the employee is directed to provide another specimen because the original specimen appeared to have been tampered with;
- Anytime a collector observes materials brought to the collection site or the employee's conduct clearly indicates an attempt to tamper with a specimen;

- Anytime the employee is directed to provide another specimen because the laboratory reported to the MRO that the original specimen was invalid and the MRO determined that there was not an adequate medical explanation for the result;
- Anytime the employee is directed to provide another specimen because the MRO determined that the original specimen was positive, adulterated or substituted, but had to be cancelled because the test of the split specimen could not be performed.
- Anytime a follow up or return to duty test is required

16. **Specimen Analysis**
All specimens will be analyzed in accordance with the procedures set forth in 49 CFR Part 40, as amended. Specimen validity testing will be conducted on all urine specimens provided for testing under DOT authority. Specimen validity testing is the evaluation of the specimen to determine if it is consistent with normal human urine. The purpose of validity testing is to determine whether certain adulterants or foreign substances were added to the urine, if the urine was diluted, or if the specimen was substituted.

17. **Dilute Test Results**
Upon receipt of MRO verified **negative-dilute** drug test results with creatinine levels greater than 5 mg/dl and less than 20 mg/dl, BBT will exercise the option to require that applicants/employees submit to a secondary urine collection as provided in 49 CFR Part 40.197. The collection of the second specimen will not be conducted under direct observation. The result of the second urine drug test will be accepted as the final result.

BBT will exercise this option uniformly for all pre-employment and random tests that produce a negative-dilute test result with creatinine levels greater than 5mg/dl but less than 20mg/dl.

Upon receipt of a **positive-dilute** urine drug test result, BBT will immediately remove the employee from safety sensitive duty and provide the employee with a referral to a DOT qualified Substance Abuse Professional. A positive dilute result is always deemed as a final positive result.

Per BBT authority, violation of this substance abuse policy will result in termination of employment.

18. **Medical Review Officer's Role and Responsibilities**
The designated Medical Review Officer (MRO) shall be a licensed physician (doctor of medicine or osteopathy) with knowledge of drug disorders. BBT shall use the following Medical Review Officer:

Name of MRO:	**Dr. Natalie Hartenbaum**
Address:	**100 Horizon Drive, Suite 102**
	Chalfont, PA 18914
Phone Number:	**800-732-3784**
Fax Number:	**215-396-5610**

The role of the MRO is to review and interpret confirmed positive test results obtained through the employer's testing program. In carrying out this responsibility, the MRO shall examine alternate medical explanations for any positive test result. This action may include conducting a medical interview and review of the individual's medical history, or review of any other relevant biomedical factors. The MRO shall review all medical records made available by the tested individual when a confirmed positive test could have resulted from legally prescribed medication. The MRO shall not, however, consider the results of urine samples that are not obtained or processed in accordance with DOT regulations.

Additionally, the MRO cannot accept an assertion of consumption of a hemp food product as a basis for verifying a confirmed marijuana (THC) test result as a negative. Consumption of a hemp food product is not to be considered a legitimate medical explanation for a prohibited substance or metabolite in an individual's specimen.

An employee shall be notified by the MRO of a laboratory confirmed positive test and a verification interview will be conducted with the employee, by the MRO in accordance with 49 CFR Parts 40.131, through 40.141

19. **Verified Positive Results**
MRO verified positive urine drug tests will result in immediate removal from safety sensitive duties and a referral to a Substance Abuse Professional that has knowledge of and clinical experience in the diagnosis and treatment of alcohol and controlled substances-related disorders, and who meets the qualifications outlined in 49 CFR Part 40.281 Subpart O, will be provided to employee

Per BBT authority, violation of this substance abuse policy will result in termination of employment.

20. **Cancelled/Invalid Test Results**
A drug test that has been declared cancelled by the Medical Review Officer, because the specimen was invalid or for other reasons, shall be considered neither positive nor negative. Additionally, a specimen that has been rejected for testing by the laboratory is reported by the MRO as a cancelled test.
When a negative urine drug test result is required (as is the case with pre-employment, return to duty and follow up test types) the employer must conduct another drug test on the individual. For some categories of cancelled drug tests, the MRO will indicate that a re-collection of a specimen using direct observation specimen collection procedures is required, regardless of test type. Direct observation collection procedures will be in accordance with 49 CFR Part 40.67 as amended. The MRO may also direct an employee to undergo a medical evaluation to determine whether or not clinical evidence of drug use exists when there are documented medical explanations for an individual producing invalid specimens and a negative result is needed for a pre-employment, return to duty or follow-up test.
For alcohol testing, a test that is deemed to be invalid per 49 CFR Part 40.267, shall be cancelled and therefore considered neither positive nor negative.

21. **Split Specimen Testing**

Split specimen collection procedures will be followed in obtaining specimens. An employee is entitled to request, within 72 hours of learning of a verified positive test result, that the split specimen be tested at a different DHHS certified laboratory than that which conducted the test of the primary specimen. If the test result of the split specimen fails to reconfirm the presence of the drug or drug metabolite, the test result shall be ruled "Canceled". The procedures for canceled tests, as outlined in 49 CFR Part 40.187, will be followed. If the test result of the split specimen is positive, the test results shall be deemed positive. If the laboratory's test of the primary specimen is positive, adulterated or substituted and the split specimen is unavailable for testing, a recollection under direct observation is required. Direct observation collection procedures will be in accordance with 49 CFR Part 40 as amended.

Split Specimen Testing is not authorized for test results reported by the MRO as "Invalid".

Payment of Split Specimen Testing:

When an employee has made a request to the MRO for a test of the split specimen, BBT is required to ensure that the cost for the split specimen testing is covered, in order for a timely analysis of the sample. *BBT will seek reimbursement from the employee for the cost of the completed test, if the results reconfirm the original positive finding.*

22. **Alcohol**

For the purposes of this policy, alcohol is defined as the intoxicating agent in beverage alcohol, ethyl alcohol or other low molecular weight alcohols including methyl or isopropyl alcohol. Alcohol use means the consumption of any beverage, mixture, or preparation, including any medication containing alcohol. 49 CFR Part 655 authorizes alcohol testing and requires BBT to take action on the findings, regardless of whether it was ingested as a beverage alcohol or in a medicinal or other preparation.

23. **Alcohol Use and Breath Alcohol Testing**

No safety-sensitive employee shall report for duty or remain on duty requiring the performance of safety-sensitive functions while having an alcohol concentration of 0.02 or greater. If there is actual knowledge that an employee may be under the influence of alcohol while performing safety sensitive functions, the employee shall not be permitted to perform or continue to perform safety-sensitive functions, pending a reasonable suspicion interview, conducted per Section 12. No safety-sensitive employee shall use alcohol while performing safety-sensitive functions, within (4) four hours prior to performing a safety sensitive function, or during the hours that they are on call or standby for duty. No safety-sensitive employee shall use alcohol within eight (8) hours following an accident or until the employee undergoes a post-accident test, whichever occurs first.

A Breath Alcohol Technician (BAT) qualified to conduct DOT breath alcohol testing shall conduct all DOT required alcohol screening tests.

In accordance with the provisions of 49 CFR Part 40, as amended, the results of both the screening and confirmation of breath alcohol tests, as applicable, shall be displayed

to the individual being tested immediately following the test(s)

The results of breath alcohol testing will be transmitted by the breath alcohol technician to BBT in a confidential manner, in writing, in person, by telephone or electronic means in accordance with 49 CFR Part 40, as amended. All testing will be conducted consistent with the procedures put forth in 49 CFR Part 40, as amended.

BBT affirms the need to protect individual dignity, privacy, and confidentiality throughout the testing process. Handling of tests and confidentially shall be in conformance with 49 CFR Part 40, and as described below:
If the initial test indicates an alcohol concentration of 0.02 or greater, a second test will be performed to confirm the results of the initial test. A safety-sensitive employee who has a confirmed alcohol concentration of greater than 0.02 but less than 0.04 will result in removal from his/her position for (8) eight hours unless a retest results in a concentration measure of less an 0.02.

An alcohol concentration of 0.04 or greater will be considered a positive alcohol test and in violation of this policy. An employee testing positive for alcohol will be immediately removed from safety sensitive duty and will be provided with a referral to a DOT qualified Substance Abuse Professional, in accordance with 49 CFR Part 40, as amended.

Per BBT authority, violation of this substance abuse policy will result in termination of employment.

24. Refusal to Submit to Alcohol Testing

The following actions constitute a refusal to submit to Alcohol Testing:

(1) Fail to appear for any test within a reasonable time, as determined by the employer, consistent with applicable DOT agency regulations, after being directed to do so by the employer.
(2) Fail to remain at the testing site until the testing process is complete
(3) Fail to provide an adequate amount of saliva or breath for any alcohol test required by this part or DOT agency regulations
(4) Fail to provide a sufficient breath specimen, and the physician has determined, through a required medical evaluation, that there was no adequate medical explanation for the failure
(5) Fail to undergo a medical examination or evaluation, as directed by the [Agency]
(6) Fail to sign the certification at Step 2 of the ATF
(7) Fail to cooperate with any part of the testing process.
A referral to a Substance Abuse Professional that has knowledge of and clinical experience in the diagnosis and treatment of alcohol and controlled substances-related disorders, and who meets the qualifications outlined in 49 CFR Part 40.281 Subpart O will be provided. *Per BBT authority, violation of this substance abuse policy will result in termination of employment.*

26. Addendum to Substance Abuse Policy

Big Bend Transit, Inc. may consider the re-employment of safety-sensitive employees terminated due to the violation the Substance Abuse Policy. Any safety-sensitive employee who is terminated due to the violation of this Substance Abuse Policy, will be subject to the requirements outlined in 49 CFR Part 655.46 and 49 CFR Part 40.285 before being reconsidered for re-employment in a safety sensitive position.

An applicant for re-employment will be permitted to return to duty to perform a safety-sensitive function after the following actions have been taken:

1. Applicant has been evaluated by a Substance Abuse professional who is qualified in accordance with 49 CFR Part 40 Subpart O.
2. Applicant has adhered to the course of treatment as prescribed by the Substance Abuse Professional.
3. Applicant has submitted to a return to duty urine drug test and/or breath alcohol test and Big Bend Transit, Inc. is in receipt of a negative result(s)
4. All return to duty urine collections will be conducted under the direct observation, in accordance with 49 CFR Part 40.67, as amended. See section 15 for a description of direct observation collection procedures.

Upon completing the return to duty process, the employee will be subject to unannounced follow-up testing for at least 12 but not more than 60 months. The frequency and duration of the follow-up testing will be prescribed by the Substance Abuse Professional. All follow-up urine drug collections will be conducted as directly observed collections in accordance with 49 CFR Part 40.67, as amended. See section 15 for a description of direct observation collection procedures.

Employee Acknowledgement of Receipt
Of Big Bend Transit, Inc.'s Substance Abuse Policy

I have received a legible copy of Big Bend Transit, Inc.'s Substance Abuse Policy. I understand that my employment with Big Bend Transit, Inc. is conditioned upon full adherence to this policy.

Employee Name: _____

Employee Signature: _____

Date: _____

Supervisor Name: _____

Supervisor Signature: _____

Date: _____

ATTACHMENT F

GRIEVANCE PROCEDURES 2016 – 2017
TAYLOR COUNTY LOCAL COORDINATING BOARD
FOR THE TRANSPORTATION DISADVANTAGED

The Taylor County Local Coordinating Board (LCB) for the Transportation Disadvantaged appointed by the Taylor County Board of Commissioners has established formal complaint/grievance procedures for the local transportation disadvantaged program. The County is required to have formal complaint/grievance procedures as specified by the Commission for the Transportation Disadvantaged pursuant to Chapter 427, Florida Statute and Rule 41-2.012, Florida Administrative Code (F.A.C). The Grievance Procedures shall be in compliance with Florida Commission for the Transportation Disadvantaged Local Grievance Guidelines for Transportation Disadvantaged Services (February 2010) and Florida Commission Transportation Disadvantaged Grievance Procedures (May 2015). The following rules and procedures shall constitute the grievance process to be used by the Coordinated Community Transportation Disadvantaged system in Taylor County.

SECTION 1. DEFINITIONS

As used in these rules and procedures the following words and terms shall have the meanings assigned therein. Additional program definitions can be found in Chapter 427, Florida Statutes and Rule 41-2, Florida Administrative Code.

1.1 Community Transportation Coordinator (CTC): means a transportation coordinator recommended by an appropriate Designated Official Planning Agency or a Metropolitan Planning Organization, if so applicable, as provided for in Section 427.015(1), Florida Statutes in an area outside the purview of a Metropolitan Planning Organization and approved by the Commission, to ensure that coordinated transportation services are provided to serve the transportation disadvantaged population in a designated service area. (The CTC for Taylor County is Big Bend Transit, Inc.)

1.2 Designated Official Planning Agency (DOPA): means the official body or agency designated by the Commission to fulfill the functions of transportation disadvantaged planning in areas not covered by a Metropolitan Planning Organization and approved by the Commission, to ensure that coordinated transportation services are provided to serve the transportation disadvantaged population in a designated service area. (Taylor County Board of Commissioners is the DOPA for Taylor County.)

1.3 Transportation Disadvantaged (TD) (User): means "Those persons who because of physical or mental disability, income status, age, or who for other reasons are unable to transport themselves or to purchase transportation and are, therefore, dependent on others to obtain access to employment, health care, education, shopping, social activities, or other life-sustaining activities, or children who are handicapped or high risk or at-risk" as defined in Section 411.202, Florida Statutes.

1.4 Agency: means an official, officer, commission, authority, council, committee, department, division, bureau, board, section, or any other unit or entity of the state or of a city, town, municipality, county, or other local governing body or a private nonprofit entity providing transportation services as all or part of its charter.

1.5 Transportation Operator: means one or more public, private for profit or private nonprofit entities engaged by the community transportation coordinator to provide service to transportation disadvantaged persons pursuant to a Transportation Disadvantaged Service Plan (TDSP)

1.6 Service Complaint: Means routine incidents that occur on a daily basis, are reported to the driver or dispatcher, or to other individuals involved with the daily operations, and are resolved within the course of a reasonable time period suitable to the complainant. Local service complaints are driven by the inability of the Community Transportation Coordinator or transportation operators, not local service standards established by the Community Transportation Coordinator, local Coordinating Board, and the Taylor County Board of Commissioners. If the Community Transportation Coordinator is also an operator, their statistics on service complaints should be included. All service complaints shall be recorded and reported by the CTC to the LCB.

1.7 Formal Grievance: A written complaint to document any concerns or an unresolved service complaint regarding the operation or administration of TD services by the CTC, DOPA, or LCB. The Grievant, in their formal complaint, should demonstrate or establish their concerns as clearly as possible.

1.8 Administrative Hearing Process: Chapter 120, Florida Statutes.

1.9 Ombudsman Program: A toll-free telephone number established and administered by the Commission for the Transportation Disadvantaged to enable persons to access information and/or file complaints/grievances regarding transportation services provided under the coordinated effort of the Community Transportation Coordinator.

SECTION 2. OBJECTIVES

2.1 The objective of the grievance process shall be to investigate, process, and make recommendations in a timely manner on formal written complaints/grievances that are not resolved between the CTC and/or individual agencies contracted by the CTC and the customer. It is not the objective of the grievance process to "adjudicate" or have "determinative" powers.

2.2 The CTC, and its service operation and other subcontractors must post the contact person's name and telephone number in each vehicle regarding the reporting of complaints.

2.3 All documents pertaining to the grievance process will be made available, upon request, in a format accessible to persons with disabilities.

2.4 A written copy of the grievance procedure shall be available to anyone upon request. The request shall be made to the CTC, Official Planning Agency, or the Commission for the Transportation Disadvantaged.

2.5 Apart from this grievance process, aggrieved parties with proper standing may also have recourse through Chapter 120, Florida Statutes Administrative Hearing Process or the judicial court system.

SECTION 3. COMPOSITION OF GRIEVANCE COMMITTEE AND TERMS

3.1 The Taylor County Local Coordinating Board shall appoint at least five (5) of its voting members to the Grievance Committee. The Grievance Committee will serve as a mediator to process and investigate complaints from agencies, users, potential users of the system, and the CTC in the designated service area and make recommendations to the LCB.

3.2 Members shall be appointed by the Chairperson of the LCB.

3.3 The Grievance Committee shall include one representative of users/clients.

3.4 The Chairperson of the LCB reserves the right to make reappointments should any conflict of interest arise.

3.5 The Planning Grant Manager or his/her designee shall also serve on the Grievance Committee.

3.6 Members of the Grievance Committee shall be appointed for a two (2) year term. Term limits of the grievance committee shall coincide with term limits of the Local Coordinating Board if applicable.

3.7 A member of the Grievance Committee may be removed for cause and/or conflict of interest by the LCB Chairperson who appointed him/her. Vacancies on the committee shall be filled in the same manner as the original appointment. The appointment to fill a vacancy shall only be for the remainder of the unexpired term being filled.

3.8 The Grievance Committee shall elect a Chairperson and Vice Chairperson. The Chair and Vice Chair shall serve for a one (1) year term but may serve consecutive terms.

3.9 A quorum of three (3) voting members shall be required for official action by the grievance committee. Meetings shall be held at such times as the necessitated by formally filed grievances.

SECTION 4: GRIEVANCE PROCESS

4.1 Grievance procedures will be those as specified by the Local Coordinating Board, developed from guidelines of the Commission for the Transportation Disadvantaged, and approved by the LCB as set forth below. The grievance procedures are for the purpose of fact-finding and not exercising adjudicative powers. It should be understood that these procedures are for the purpose of "hearing", "advising" and "making recommendations" on issues related to service delivery and administration of the transportation disadvantaged program in the Taylor County service area.

4.2 Apart from the grievance procedures outlined below, aggrieved parties with proper standing may also have recourse through the Commission for the Transportation Disadvantaged Chapter 120, Florida Statutes Administrative Hearing Process, or the judicial court system.

4.3 Service Complaints. All service complaints should be recorded and reported by the Community Transportation Coordinator (CTC) to the Local Coordinating Board. The CTC

should also include statistics on service complaints. Service complaints may include but not be limited to:

a. Late trips (late pick up or drop off)
b. No show by transportation operator
c. No show by client/rider
d. Client/rider behavior
e. Driver behavior
f. Passenger comfort/discomfort
g. Service denial (refusing service to rider without an explanation as to why)
h. Unsafe driving
i. Others as deemed appropriate by the Local Coordinating Board

4.4 Formal Grievance. The client/rider, in their formal complaint, should demonstrate or establish their concerns as clearly as possible. The formal grievance process shall be open to addressing concerns by any person or agency including but not limited to: purchasing agencies, users, and potential users, private for-profit operators, private non-profit operators, the Community Transportation Coordinator, the Designated Official Planning Agency, elected officials and drivers. Formal grievances may include but are not limited to:

a. Chronic or recurring or unresolved service complaints
b. Violations of specific laws governing the provisions of the TD Services (i.e., Chapter 427, F.S., Rule 41-2 FAC and accompanying documents, Sunshine Law and ADA)
c. Denial of service
d. Suspension of service
e. Unresolved safety issues
f. Contract disputes (Agencies/Operators)
g. Coordination of disputes
h. Bidding disputes
i. Agency compliance
j. Conflicts of interest
k. Supplanting of funds
l. Billing and/or account procedures
m. Others as deemed appropriate by the Local Coordinating Board

4.5 All formal grievances filed must be written and at a minimum contain the following:

a. Name and address of the client/rider
b. A statement of the grounds for the grievance and supporting documentation, made in a clear and concise manner. This shall include efforts made by the client taken to resolve the issue.
c. An explanation of the relief desired by the client.

If the client does not supply the above information to substantiate the grievance, no further action shall be taken.

4.6 The following steps shall be taken after a formal grievance has been filed:

Step One: The customer shall first contact the Community Transportation Coordinator (CTC) or the entity which they have a complaint. Big Bend Transit, Inc. is the Taylor County CTC and can be contacted at 850-574-6266. The customer may also contact the Commission for the Transportation Disadvantaged Ombudsman representative at 1-800-983-2435. The CTC will attempt to mediate and resolve the grievance. Minimum guidelines for the CTC include:

a. All CTC and transportation subcontractors (including coordination contractors) must make a written copy of their procedures and rider policies available to anyone, upon request.

b. All CTC and transportation subcontractors (including coordination contractors) must post the contact person and telephone number for access to information regarding reporting service complaints or filing a formal grievance in each of their vehicles in plain view of riders.

c. Grievance procedures must specify a minimum amount of days (not to exceed 15 working days) to respond to Grievant in writing noting the date the grievance was received and date by which a decision will be made.

d. The CTC will render a decision in writing, giving the complainant an explanation of the facts that lead to the CTC's decision and provide a method or ways to bring about a resolution.

e. All documents pertaining to the grievance process will be made available, upon request, in a format accessible to persons with disabilities.

f. The CTC Board of Directors, owners or whoever is legally responsible must receive a copy of the grievance and response.

Step Two: If mediation with the CTC and/or the applicable entity is not successful, the CTC or the client may file an official complaint with the Planning Grant Manager or their designee of the Designated Official Planning Agency. Taylor County Board of Commissioners is the DOPA and the Planning Manager can be reached at 850-838-3553.

Step Three: The Planning Grant Manager or their designee on behalf of the DOPA will make every effort to resolve the grievance by arranging a meeting between the involved parties in an attempt to assist them in reaching an amicable resolution. The meeting shall take place within seven (7) working days of receipt of all evidence regarding the grievance. The representative of the DOPA shall prepare a report regarding the meeting outcome. The report shall be sent to the client and the Chair of the Grievance Committee within seven (7) working days of the meeting.

Step Four: If the representative of the DOPA is unsuccessful at resolving the grievance through the process outlined in Step Three, the customer may request, in writing, that their grievance be heard by the Grievance Committee. This request shall be made within seven (7) working days of receipt of the report prepared as a result of the mediation meeting under Step Three and sent to the DOPA represented by the Local Coordinating Board (LCB) Chairman.

Step Five: Upon receipt of the written request for the grievance to be heard by the Grievance Committee, the LCB Chairman shall have fifteen (15) working days to contact Grievance Committee members and set up a grievance hearing date and location. The client and all parties involved shall be notified of the hearing date and location at least seven (7) working days prior to the hearing date by certified mail, return receipt requested.

Step Six: Upon conclusion of the hearing, the Grievance Committee must submit a written report of the hearing proceedings to the LCB Chairperson within ten (10) working days. The report must outline the grievance and the Grievance Committee's findings and recommendations. If the grievance is resolved through the hearing process in the above outlined steps, the grievance process will end. The final report will be forwarded to the members of the LCB.

Step Seven: If the grievance has not been resolved as outlined in the above steps, the client may request, in writing, that their grievance be heard by the full LCB. This request must be made in writing and sent to the LCB Chairman within five (5) working days of receipt of the Grievance Committee Hearing report. The client may make their request for a hearing before the LCB immediately following the Grievance Committee hearing, however until the final report is prepared from that meeting; the time frames established for notification of meeting herein apply.

Step Eight: The DOPA/ LCB Chairman shall have fifteen (15) working days to set a meeting date. LCB members shall have at least ten (10) working days notice of such meeting. The meeting shall be advertised as so appropriate in the news media and/or other mandated publications. The Grievance Committee's report must be received by the DOPA/ LCB Chairman within seven (7) working days of the hearing. The report shall then be forwarded to the client, members of the Grievance Committee, members of the Local Coordinating Board and all other persons/agencies directly involved in the grievance process.

Step Nine: The result/recommendations of the Local Coordinating Board hearing shall be outlined in a final report to be completed within seven (7) working days of the hearing. The report shall then be forwarded to the customer, members of the Local Coordinating Board, and all other persons/agencies directly involved in the grievance process.

If the grievance has not been resolved as outlined in these grievance procedures, the client/rider may exercise their adjudicative rights, use the Administrative Hearing Process outlined in Chapter 120, Florida Statutes, or request their grievance be heard by the Commission for the Transportation Disadvantaged through the Ombudsman Program established herein and the Commissions Grievance Process outlined in Section 5.

SECTION 5: COMMISSION FOR THE TRANSPORTATION DISADVANTAGED GRIEVANCE PROCESS

5.1 If the Local Coordinating Board does not resolve the grievance, the client will be informed of his/her right to file a formal grievance with the Ombudsman Program provided by the Commission for the Transportation Disadvantaged. The client may begin this process by contacting the Commission through the TD Helpline at 1-800-984-2435 or 850-488-6036 or by mail to: Florida Commission for the Transportation Disadvantaged, 605 Suwannee Street MS-49, Tallahassee, FL 32399-0450 or by email at www.dot.state.fl.us/ctd. For hearing or

speech impaired clients they may call, 711 (Florida only) Florida Relay System or 850-410-5708 for TTY. Upon request of the client, the Commission will provide the client with an accessible copy of the Commission's Grievance Procedures. The Ombudsman Program is available to anyone requesting assistance to resolve complaints or grievances.

All of the steps outlined in Section 4 must be attempted in the listed order before a grievance will move to the next step in the formal grievance process with the Commission for the Transportation Disadvantaged. The client should be sure to try and have as many details as possible when filing a complaint, such as dates, times, names, vehicle numbers, etc.

5.2 Chapter 427, F.S. does not expressly confer the power or authority for the Commission for the Transportation Disadvantaged to "hear and determine" a grievance between two third parties. The Commission for the Transportation Disadvantaged can listen to grievances and it can investigate them from a fact-finding perspective. It cannot be the "judge" or "arbiter" of the grievance in the sense of determining that one party's version of the facts is right and the other is wrong, and order the wrong party to somehow compensate the right party. On the other hand, the grievance may bring to light a problem within "the system". Similarly, if the grievance showed that one of the parties with whom the Commission for the Transportation Disadvantaged contracts was acting so aberrantly as to not be in compliance with its contract, the Commission for the Transportation Disadvantaged could exercise whatever contractual rights it has to correct the problem.

Accordingly, the Commission for the Transportation Disadvantaged ' may take part in the grievance process, if it wants to, for purposes of listening to the grieving parties and gathering the facts of the matter. It may not decide the grievance, where doing so would amount to an exercise of adjudicative powers.

5.3 Medicaid transportation service complaints, grievances, or appeals should be addressed through the Medicaid Grievance System. The Medicaid Grievance System has a complaint process which can be accessed online at http://ahca.myflorida.com/Medicaid. Complaints can also be made by calling 1-877-254-1055. The Medicaid Fair Housing Process is conducted through the Department of Children and Families.

5.4 If the Commission is unable to resolve the grievance, the client will be referred to the Office of Administrative Appeals or other legal venues appropriate to the specific nature of the grievance.

Grievance Procedures Process Chart at the Local Level

Type	Time Frame to File	Provide Transportation Services During Review	Time Frame to Resolve	Extension Time Frame	Time Frame to Send Written Notification of Resolution	Next Step (if any)
Complaint	Ninety (90) working days from the date of the incident that precipitated the complaint.	Yes	Fifteen (15) working days.	Ten (10) working days.	Five (5) working days from the date of the complaint.	File a grievance.
Grievance	Ninety (90) working days from the date of the action that precipitated the grievance to be filed.	Yes	Ninety (90) working days.	Fourteen (14) working days.	Seven (7) working days from the date of the resolution of the grievance.	File grievance with the Florida Commission for the Transportation Disadvantaged

NAMES AND ADDRESSES OF PERSONS/ENTITIES REFERENCED IN GRIEVANCE PROCEDURES

Big Bend Transit, Inc.
P.O. Box 1721
Tallahassee, Florida 32302
Contact: Shawn Mitchell- Transportation Manager
Phone: 850-574-6266
smitchell@bigbendtransit.org

Taylor County Planning Grant Manager
201 East Green St.
Perry, Florida 32347
Contact: Melody Cox or Jami Boothby
Phone: 850-838-3553
melody.cox@taylorcountygov.com or grants.assist@taylorcountygov.com

Taylor County Board of Commissioners
201 East Green St.
Perry, Florida 32347
Contact: County Administrator
Phone: 850-838-3500 ext. 107

Taylor County Local Coordinating Board Chairperson:
Taylor County Board of Commissioners
201 East Green St.
Perry, Florida 32347
Phone: 850-838-3500 ext 107

Florida Commission for the Transportation Disadvantaged Helpline 800-983-2435
or
Florida Commission for the Transportation Disadvantaged
605 Suwannee Street, MS-49
Tallahassee, FL 32399-0450
or
www.dot.state.fl.us/ctd

For Hearing and Speech impaired call 711 (Florida only) Florida Relay System or 850-410-5708 for TTY

Americans with Disabilities Act (ADA) 800-514-0301 (Voice) and 800-514-0383 (TTY)

Disability Rights Florida 800-342-0823

CERTIFICATION

The undersigned hereby certifies that they are the Chairperson of the Transportation Disadvantaged Local Coordinating Board and that the foregoing is a full, true and correct copy of the Grievance/Complaint Rules and Procedures of this Board as reviewed and adopted on the _____ day of _____, 2017

_____
, Chairperson
Local Coordinating Board for the Transportation Disadvantaged

APPROVED BY THE TAYLOR COUNTY BOARD OF COMMISSIONERS, THE OFFICIAL DESIGNATED PLANNING AGENCY

_____
Pam Feagle, Chairman
Taylor County Board of Commissioners

December 13, 2016
Date

BIG BEND TRANSIT

Rider Guide

Florida Relay Service at 1-800-955-8711 provides TDD accessibility

Accessible formats are available upon request

RESERVATIONS - SCHEDULING TRIPS

Trip reservations can be scheduled anywhere from one day and up to three days in advance. Customer Service Representatives are available five days a week from 8:00 a.m. to 5:00 p.m. to schedule a ride. Reservations must be made **no later than** 2:00 p. m. the day before a scheduled trip. BBT does NOT offer same day service. Same day changes to a pick-up or drop-off time and address **cannot** be made. Therefore, be sure to have the correct information when scheduling a ride. For cancellations and inquires, Customer Service Representatives are available Monday - Saturday from 6:00 a.m. to 6:00 p.m.

Be prepared to provide the following information:

1. First and last name.
2. Date of travel.
3. The time you would like to be picked up OR the time you need to reach your destination.
4. Complete pick-up address, including an apartment number, suite number, and gate or security code, building identification, zip code and telephone number. Note: Same day changes to a pickup time or address **cannot** be made, so make sure the trip information is correct.
5. Complete destination address, including building, suite or apartment number, zip code and telephone number. Note: Same day changes to a return time or address cannot be made, so make sure that the trip information is correct.
6. Be sure to inform the Customer Service Representative if a personal care attendant (PCA), escort (special needs if any) service animal and/or companion or child will accompany the rider.
7. Inform the Customer Service Representative at the time of reservation if you are traveling with an assistive device, such as a wheelchair, scooter, walker, cane, oxygen tank, etc.

CONFIRMING TRIPS

Trips will be confirmed at the time you make your reservation(s). Please verify dates, times and addresses before ending the call to ensure the accuracy of your scheduled trip.

BBT VEHICLE TYPES

BBT uses a variety of branded vehicle types including lift-equipped vans and mini-vans with ramps that meet the Federal ADA Regulations. Rides will be scheduled based upon which vehicle best meets service needs.

ON BOARD RIDE TIME

The average trip length can be 60 minutes or more. A trip may exceed or fall below that average depending on the circumstances.

TRIP PICK UP POINTS – WHERE TO WAIT FOR YOUR RIDE

Operators will assist you to and from the threshold of a building. Operators must maintain physical sight of the vehicle at all times, and are not permitted to enter beyond the threshold or ground level of any building. If a rider will need assistance exiting the pick-up location, a companion or personal care attendant should travel with the rider in order to provide assistance.

Door-to-door service DOES NOT include any of the following:

- Assisting passengers on unsafe or steeply inclined mobility ramps or stairs
- Entering beyond the door threshold
- Locking/unlocking doors or activating/deactivating house alarms
- Loading/unloading personal items

If a rider cannot be left unattended (as a result of his or her age, disability or impairment), a companion or personal care attendant is required to receive the passenger upon the vehicle's arrival.

APARTMENTS/OFFICE COMPLEXES

When scheduling your trip, please provide Customer Service with a specific building name and/or number within the complex. The operator will pick up the rider at that specific building. If a rider's building is located within a gated community and requires special entry, be sure to provide Customer Service with an entry code, or, notify the security office to arrange entry for the Paratransit vehicle **before** pick-up time. If the rider does not arrange entry, and the vehicle is unable to enter the pick-up area, the rider will be considered a No-Show. (*See NO-SHOWS)

NURSING HOMES

Riders with pick-ups at nursing homes should meet the operator in front of the main lobby. Operators are not permitted to go to rooms to pick up riders.

Operators cannot assist riders in and out of a nursing home. Nursing home staff should be ready to assist the individual in or out of the building if necessary. Riders will be dropped off in front of the main lobby of the nursing home.

ADULT PROGRAM/DAY CARE CENTERS

Riders attending adult programs or day care centers should be ready when paratransit vehicles arrive. Operators cannot assist riders in or out of adult program/day care centers. Facility staff should be ready to assist the individual in or out of the building if necessary. If the adult program/day care center requires special entry, facility staff should arrange entry for the paratransit vehicle **before** pick-up time. If the rider does not arrange for entry, and the vehicle is unable to enter the pick-up area, the rider will be considered a No-Show (*SEE NO-SHOWS).

HOSPITALS

Unless otherwise requested by the patron, the default drop-off location at all hospitals will be at the main entrance of the facility. The patron may request another drop off location if there is a safe place at an entrance nearer to the office he/she will be visiting. Please keep in mind that, unless a specific pick-up location is requested, the pick-up location for the return trip will default to the main hospital entrance.

SHOPPING MALLS

When scheduling a trip to a shopping mall, the patron must specify the exact store entrance nearest to the street where he/she wishes to be dropped off and picked up (for example "Macy's East side entrance" or "food court entrance"). The default drop-off and pick-up locations will be at the street entrance nearest to the food court. Should the patron wish to be picked up for his/her return trip at any entrance other than the default location, the patron must request the pick-up location nearest to the street when scheduling a trip.

VEHICLE ARRIVAL - 5 MINUTE RULE/ WINDOW TIME

Transit operators will wait 5 minutes for a rider to board the vehicle when arriving within the 30-minute ready-time window. If a rider does not board the vehicle within the 5-minute wait time, the operator by dispatch directions will mark the rider as a No-Show and will depart the location. BBT is not required to call the rider when the vehicle arrives or before leaving the pick-up location. Riders are expected to be ready to board the vehicle upon its arrival. When the vehicle arrives, you are required to present exact fare or a valid coupon. Please note: The operator cannot take you to your requested destination without the required fare.

VEHICLE IS LATE - NEXT STEP

If the vehicle has not arrived by the end of your 30-minute pick-up window, please call your local Customer Service Representatives at:

Jefferson County—850-997-1323

Leon County—850-574-6064

Gadsden County—850-627-9958

Taylor County—850-584-9546

Madison County—850-973-6471

USING WHEELCHAIRS OR OTHER MOBILITY DEVICES

BBT will make every attempt to accommodate standard wheelchairs, scooters, and other mobility devices. These devices should not exceed 48" in length, 30" in width and 600 pounds in total weight. Mobility devices larger than these standards may be denied service aboard BBT vehicles. For our riders' safety, BBT cannot transport riders with broken mobility devices or devices without working brakes. Please be sure that wheelchairs or other mobility devices are clean, safe and in good working condition before traveling with BBT.

SECUREMENT ON BOARDING

Operators will make all attempts to secure standard wheelchairs and scooters. If a wheelchair or scooter exceeds the normal size, the operator may ask the rider to transfer to a seat, as it may be difficult to safely secure the passenger within the mobility device. It is the rider's choice to transfer or to remain in his or her mobility device.

SUBSCRIPTION TRIPS

A subscription trip is defined as travel that will be repeated at the same times and days of the week for a specific purpose (work, education, medical treatment, etc.). This type of trip must be made a minimum of twice a week for a minimum of 30 days. Patrons are required to book this trip for a two-week period before it is eligible to become classified as a subscription trip. Any changes in frequency or time to a subscription trip will result in an additional week call-in period for those modifications to become a subscription. No more than two changes can be made within a 30-day period. Frequent cancellations could result in termination of a subscription.

NEGOTIATED TRIP TIMES

Occasionally, the exact time you wish to travel may not be available. In that case, Customer Service may offer you other choices that may be up to one hour earlier or one hour later than the time you wish to travel. If you need to arrive at your destination by a specific time, tell the Customer Service Representative. They will attempt to give you a pick-up time that will get you to your destination on time. If your travel time is more flexible, you may be offered a negotiated trip time.

*NO-SHOWS

A No-Show occurs when you fail to board the BBT vehicle within five minutes after it arrives within the pick-up window or if you violate BBT policies and as a result you are not transported. Trips that are not canceled at least two or more hours before your scheduled time will be considered a No-Show. If you receive a No-Show on your trip leaving from the point of origin, the return trip will automatically be canceled unless you request to keep the return trip.

NO-SHOW--SUSPENSION OF SERVICES

When you accumulate a total of four No-Shows within a 30-day period, you will receive a written Notice of Service Suspension, and a 30-day service suspension will be imposed. A second suspension (four more no-shows) within a six-month period may result in an additional service suspension of 60 days. If more than two suspensions occur in a six-month period, service will be cancelled for up to one year.

NO-SHOW SUSPENSION APPEAL PROCESS

A rider who disputes the basis for a suspension of service, termination of service or loss of subscription privileges can write the office of BBT at: **PO Box 1721 Tallahassee, Florida 32302**. If a reconsideration hearing is requested, the hearing will be held by the local Transportation Disadvantaged Coordinating Board Grievance Committee if the suspension involves transportation provided under Florida's Transportation Disadvantaged Program.

TRAVELING WITH PCA'S/GUESTS/ SERVICE ANIMALS

Personal Care Attendant--A personal care attendant can accompany a rider at no additional charge. Your file must indicate that you are eligible to have a personal care attendant travel with you, and you must reserve space for the attendant when *scheduling* your trip.

Children--Florida law requires that all children under the age of four or weighing less than 50 pounds must be properly restrained in a child safety seat. BBT **DOES NOT** PROVIDE CHILD SAFETY SEATS.

Service Animals--Guide dogs and other service animals are allowed to accompany you if this need is indicated in your file. When scheduling a trip, please inform Customer Service if a service animal will be accompanying you on the trip.

TRAVELING WITH PACKAGES -

TWO PACKAGE LIMIT

Carry-on packages are limited to 2 bags or similar-sized packages that can be carried by the patron onboard BBT vehicles. Operators do not assist riders with personal belongings. Patrons can keep travel carts loaded if the cart fits fully between the seat next to the passenger and the seatback in front of that seat. Patrons must fold grocery carts if the cart cannot fit between the seat and the seatback in front of it and secure their carry-on items to keep aisles and exits clear on the bus. Patrons must fold their own strollers or grocery carts when required.

If a patron requires the use of oxygen, it must be identified, it must be a portable tank.

FARES

All eligible riders, regardless of age, must pay exact fare when boarding. Operators cannot give change. BBT fare coupons can be purchased from the office.

RULES OF CONDUCT

Riders are asked to follow these rules of conduct to ensure the safety and comfort of all riders and the operator:

- No loud conversations on cell phones
- No eating, drinking or smoking on board
- No riding under the influence of alcohol or illegal drugs
- No abusive, threatening or obscene language or actions
- No discharge of bodily fluids or open wounds
- No deliberate fare evasion
- No physical abuse of another rider, or the operator
- No operating or tampering with any equipment while onboard a BBT vehicle
- No radios, MP3 players, compact disc players or other sound generating equipment are to be played aboard the vehicles WITHOUT EAR PLUGS
- For safety reasons, please limit unnecessary conversation with operators when the vehicle is in motion

Riders who violate the rules of conduct are subject to penalties, up to and including suspension of service.

Note: **Riders who engage in physical abuse or cause physical injury to another rider or operator may be subject to immediate and permanent suspension, as well as possible criminal prosecution.**

OPERATOR ASSISTANCE

At the request of the patron, a BBT Operator may assist the patron from the outside door of their pick-up location to the outside door of their destination.

BBT Operators may not lock or unlock doors, lift or carry a patron, lift the patron's wheelchair up or down steps, search for a patron in a building, carry/load bags or personal belongings, call the patron at home, or perform any other assistance that should be undertaken by a personal care attendant.

12

TAYLOR COUNTY BOARD OF COMMISSIONERS

County Commission Agenda Item

SUBJECT/TITLE:	Board to review and approve the Florida Department of Transportation Supplemental Joint Participation Agreement (JPA) #436705-1-94-17 and Resolution for the design and replacement of airfield lighting and signage at Perry Foley Airport.
MEETING DATE REQUESTED:	April 3, 2017

Statement of Issue: **Board to review and approve the Supplemental JPA in the amount of $173,755.00 and Resolution. The grant is to be used for the design and replacement of airfield lighting and signage on Runways 18-36 and 12-30 at Perry Foley Airport.**

Recommended Action: **Approve the FDOT Supplemental Joint Participation Agreement and Resolution.**

Fiscal Impact: **The JPA is in the amount of $173,655.00 The project will be 100% grant funded.**
THE COUNTY IS NOT PROVIDING A MATCH.

Budgeted Expense: Y/N **The original budget was $111,963 and will now be increased by $61,692.00.**

Submitted By: **Melody Cox**

Contact: **Melody Cox**

SUPPLEMENTAL MATERIAL / ISSUE ANALYSIS

History, Facts & Issues: **This project will be completed in a three phases over the next three years as the total project has a projected cost of $600,000. The original JPA was executed September 8, 2015 in the amount of $111,963. FDOT had additional funding available in the amount of $61,692.00 and has increased the JPA to a total of $173,655.00. We are working with FAA and FDOT to obtain funding for the additional phases. AVCON, Inc. is currently in the final stages of completing the design and engineering for the project. This must be complete to be eligible for FAA**

funding. Currently, a large portion of the wiring which will be replaced dates back to the 1940's.

Attachments: FDOT Supplemental Joint Participation Agreement and Resolution.

MALCOLM PAGE	JIM MOODY	FRANK RUSSELL	PAM FEAGLE	THOMAS DEMPS
District 1	District 2	District 3	District 4	District 5

TAYLOR COUNTY
BOARD OF COUNTY COMMISSIONERS

ANNIE MAE MURPHY, Clerk
Post Office Box 620
Perry, Florida 32348
(850) 838-3506 Phone
(850) 838-3549 Fax

CONRAD C. BISHOP, JR., County Attorney
Post Office Box 167
Perry, Florida 32348
(850) 584-6113 Phone
(850) 584-2433 Fax

Upon motion of Commissioner_____ with second by Commissioner _____ and a vote of _____ the Board of Taylor County Board of County Commissioners, adopt the following resolution:

RESOLUTION

WHEREAS, The ***Taylor County Board of Commissioners***, and the ***State of Florida Department of Transportation (FDOT)*** have determined it to be in their mutual interest to facilitate the development of the herein described project at the ***Perry Foley Airport***, to wit:

PERRY FOLEY AIRPORT –Additional funds to cover design and installation of airfield lighting and signage on runways 18-36 and 12-30 with new cable in conduit, including permitting, testing, inspections, project management , administration and any repairs needed as a result of any damages prior to completion of the new lighting system.
Financial Project No: 436705-1-94-17

WHEREAS, the State of Florida Department of Transportation (FDOT), and the Taylor County Board of County Commissioners have agreed to the project; the project has an estimated cost of $173,655.00; FDOT will be funding a maximum of $173,655.00 as Taylor County is eligible for 100% funding under the Rural Economic Development Initiative (REDI) pursuant to Florida Statute 288.0656; and;

WHEREAS, both parties now wish to formalize the arrangement in the form of a Joint Participation Agreement (JPA).

NOW THEREFORE, be it resolved, as follows:

1. The ***TAYLOR COUNTY BOARD OF COMMISSIONERS*** confirms its desire to enter into a Joint Participation Agreement with the ***State of Florida Department of Transportation;***
2. *Taylor County is eligible for 100% funding for the project under the Rural Economic Development Initiative (REDI);*
3. The Chairman, Pam Feagle, or her authorized designee, is authorized to execute this Resolution of the Taylor County Board of Commissioners; and
4. The Chairman, Pam Feagle, or her authorized designee, is herein specifically authorized to enter into and sign such documents as may be necessary, including the referenced Joint Participation Agreement with the State of Florida Department of Transportation

WITNESSETH: Adopted the 3rd day of April 2017 in Regular Session by the ***Taylor County Board of Commissioners.***

Board of County Commissioners
Taylor County, Florida

By: _____
Pam Feagle, Chairperson

Attest: _____
Annie Mae Murphy, Clerk

STATE OF FLORIDA DEPARTMENT OF TRANSPORTATION

PUBLIC TRANSPORTATION
SUPPLEMENTAL JOINT PARTICIPATION AGREEMENT

Number 1

Financial Project No.: 436705-1-94-17 (item-segment-phase-sequence)	Fund: DDR,DPTO	FLAIR Approp.: 088719
	Function: 215	FLAIR Obj.: 751000
	Federal No.:	Org. Code: 55022020228
Contract No.: G0439	DUNS No.: 80-939-7102	Vendor No.: VF596000879004
CFDA Number:	CSFA Number: 55.004	

THIS AGREEMENT, made and entered into this _____ day of _____

by and between the STATE OF FLORIDA DEPARTMENT OF TRANSPORTATION, an agency of the State of Florida,

hereinafter referred to as the Department, and Taylor County

511 Industrial Drive Perry, FL 32348

hereinafter referred to as Agency.

W I T N E S S E T H :

WHEREAS, the Department and the Agency heretofore on the 1 st day of October , 2015

entered into a Joint Participation Agreement; and

WHEREAS, the Agency desires to accomplish certain project items as outlined in the Attachment "A" appended hereto; and

WHEREAS, the Department desires to participate in all eligible items for this project as outlined in Attachment "A" for a total Department Share of $ 173,655.00

NOW, THEREFORE THIS INDENTURE WITNESSETH: that for and in consideration of the mutual benefits to flow from each to the other, the parties hereto agree that the above described Joint Participation Agreement is to be amended and supplemented as follows:

1.00 Project Description: The project description is amended

PERRY-FOLEY AIRPORT - Additional funds to cover design and installation of airfield lighting and signage on runways 18-36 and 12-30 with new cable in conduit, including permitting, testing, inspections, project management, administration and any repairs needed as a result of any damages prior to completion of the new lighting system.

The municipality is eligible for and has requested a Rural Economic Development Initiative (REDI) waiver pursuant to Florida Statute 288.0656.

2.00 Project Cost:

Paragraph 3.00 of said Agreement is ● increased ○ decreased by $ 61,692.00

bringing the revised total cost of the project to $ 173,655.00

Paragraph 4.00 of said Agreement is ● increased ○ decreased by $ 61,692.00

bringing the Department's revised total cost of the project to $ 173,655.00

3.00 Amended Exhibits:

Exhibit(s) B & D of said Agreement is amended by Attachment "A".

4.00 Contract Time:

Paragraph 16.00 of said Agreement 12/31/2020.

5.00 E-Verify:

Vendors/Contractors:

1. shall utilize the U.S. Department of Homeland Security's E-Verify system to verify the employment eligibility of all new employees hired by the Vendor/Contractor during the term of the contract; and

2. shall expressly require any subcontractors performing work or providing services pursuant to the state contract to likewise utilize the U.S. Department of Homeland Security's E-Verify system to verify the employment eligibility of all new employees hired by the subcontractor during the contract term.

Financial Project No. 436705-1-94-17

Contract No. G0439

Agreement Date _____

Except as hereby modified, amended or changed, all other terms of said Agreement dated 10/1/2015 and any subsequent supplements shall remain in full force and effect.

IN WITNESS WHEREOF, the parties hereto have caused these presents to be executed, the day and year first above written.

AGENCY	FDOT
Taylor County	See attached Encumbrance Form for date of Funding Approval by Comptroller
AGENCY NAME	
SIGNATORY (PRINTED OR TYPED)	LEGAL REVIEW DEPARTMENT OF TRANSPORTATION
	James M. Knight, P.E.
SIGNATURE	DEPARTMENT OF TRANSPORTATION
	Urban Planning and Modal Administrator
TITLE	TITLE

Financial Project No. 436705-1-94-17

Contract No. G0439

Agreement Date

ATTACHMENT "A"
SUPPLEMENTAL JOINT PARTICIPATION AGREEMENT

This Attachment forms an integral part of that certain Supplemental Joint Participation Agreement between

the State of Florida, Department of Transportation and Taylor County

511 Industrial Drive Perry, FL 32348

dated 10/1/2015

DESCRIPTION OF SUPPLEMENT (Include justification for cost change):

PERRY-FOLEY AIRPORT - Additional funds to cover design and installation of airfield lighting and signage on runways 18-36 and 12-30 with new cable in conduit, including permitting, testing, inspections, project management, administration and any repairs needed as a result of any damages prior to completion of the new lighting system.

		As Approved	As Amended	Net Change
I.	Project Cost	$111,963.00	$173,655.00	$61,692.00

		As Approved	As Amended	Net
II.	Fund	DDR,DPTO	DDR,DPTO	DDR,DPTO
	Department:	$111,963.00	$173,655.00	$61,692.00
	Agency:	$0.00	$0.00	$0.00
	Federal:	$0.00	$0.00	$0.00
	Total Project Cost	$111,963.00	$173,655.00	$61,692.00

Comments:

ATTACHMENT "A"
SUPPLEMENTAL JOINT PARTICIPATION AGREEMENT

III. MULTI-YEAR OR PREQUALIFIED PROJECT FUNDING

If a project is a multi-year or prequalified project subject to paragraphs 4.10 and 17.20 of this agreement, funds are programmed in the Department's Work program in the following fiscal year(s):

FY	Amount
2016	$111,963.00
2017	$61,692.00
2018	$438,892.00

13

TAYLOR COUNTY BOARD OF COMMISSIONERS	
County Commission Agenda Item	
SUBJECT/TITLE:	
MEETING DATE REQUESTED:	APRIL 3, 2017

Statement of Issue: **THE COUNTY ATTORNEY TO PRESENT AN ORDINACE AND NOTICE WHICH REPEALS ORDINANCE NO. 2017-02 AND PRESENT AN ORDINANCE AND NOTICE WHICH SETS OUT AND PASSES THE 1 CENT SALES SURTAX BUT SETS IT ONLY AT 1 CENT AND THAT IT WILL ONLY START ONCE THE HOSPITAL BOND IS PAID OFF.**

Recommended Action: **APPROVE**

Fiscal Impact: **NONE**

Budgeted Expense: **NONE**

Submitted By: **County Attorney**

Contact:

SUPPLEMENTAL MATERIAL / ISSUE ANALYSIS

History, Facts & Issues:

Options: **N/A**

Attachments: Letter, repeal and new ordinance.

The Bishop Law Firm, P.A.
Attorneys at Law

CONRAD C. BISHOP, JR.
CONRAD C. "SONNY" BISHOP, III

POST OFFICE BOX 167
411 N. WASHINGTON STREET
PERRY, FLORIDA 32348

IN MEMORIAL OF
KATHLEEN MCCARTHY BISHOP 1966-2013

(850) 584-6113
FAX (850) 584-2433

March 20, 2017

VIA E-MAIL AND REGULAR MAIL

Hon. Annie Mae Murphy
Clerk of Court
Post Office Box 620
Perry, Florida 32348

Mr. Ted Lakey
County Administrator
County Offices
201 E. Green Street
Perry, Florida 32347

Dear Annie Mae and Ted:

As you know the Department of Revenue got in touch with me and told me that Ordinance No. 2017-02 was not clear and that it looked like we were passing an additional 1 cent sales surtax, which of course was not the Board's intent.

So, with the above in mind, I have prepared the following which is enclosed:

1. An Ordinance and Notice which repeals Ordinance No. 2017-02.

2. An Ordinance and Notice which sets out and passes the 1 cent sales surtax but sets it only at 1 cent and that it will only start once the hospital bond is paid off.

Please review this and let me know if you think it is sufficient.

Thank you very much and I hope you are doing fine.

Respectfully,

Conrad C. Bishop, Jr.

CCB/kp

enclosures

ORDINANCE NO.:_____

AN ORDINANCE OF THE BOARD OF COUNTY COMMISSIONERS OF TAYLOR COUNTY, FLORIDA, REPEALING ORDINANCE NO. 2017-02; PROVIDING SEVERABILITY AND PROVIDING AN EFFECTIVE DATE.

WHEREAS, the Board has been informed that there is confusion with regard to Ordinance No. 2017-02 to how the sales surtax will be used, and

WHEREAS, the Board wishes to correct any confusion.

THEREFORE, BE IT ORDAINED BY THE BOARD OF COUNTY COMMISSIONERS OF TAYLOR COUNTY, FLORIDA:

Section 1. That Ordinance No. 2017-02 is hereby repealed.

Section 2. **Severability.** If any phrase or portion of this Ordinance is held invalid or unconstitutional by any court of competent jurisdiction, such portion shall be deemed a separate, distinct and independent provision, and such holding shall not affect the validity of the remaining portion.

Section 3. **Effective Date.** This Ordinance shall be effective as provided by law.

PASSED and ADOPTED in regular session by the Board of County Commissioners of Taylor County, Florida, on this ____day of _____, 2017.

BOARD OF COUNTY COMMISSIONERS
TAYLOR COUNTY, FLORIDA

BY:_____
PAM FEAGLE, Chairperson

ATTEST:

_____
ANNIE MAE MURPHY, Clerk

NOTICE (PURSUANT TO FLORIDA STATUTE 125.66)

Notice is hereby given that the Board of County Commissioners of Taylor County, Florida will hold a public hearing on the passage of the proposed Ordinance Repealing Ordinance No. 2017-02, the public hearing shall be held at the Board of County Commission Meeting Room, Taylor County Courthouse Annex, Old Post Office Building in Perry, Florida, at the regular board meeting on _____, 2017, at _____. The title of the proposed ordinance is:

- **AN ORDINANCE OF THE BOARD OF COUNTY COMMISSIONERS OF TAYLOR COUNTY, FLORIDA, REPEALING ORDINANCE NO. 2017-02; PROVIDING SEVERABILITY AND PROVIDING AN EFFECTIVE DATE.**

The proposed ordinance may be inspected by the public at the Clerk of the Circuit Court's Office at the Taylor County Courthouse, Perry, Taylor County, Florida.

All members of the public are welcome to attend. Notice is further hereby given, pursuant to Florida Statute 286.0105, that any person or persons deciding to appeal any matter considered at this public hearing will need a record of the hearing and may need to ensure that a verbatim record of the proceedings is made, which record includes the testimony and evidence upon which the appeal is to be based.

DATED this ___ day of _____, 2017, by ANNIE MAE MURPHY, Clerk of the Circuit Court and Clerk of the Board of County Commissioners of Taylor County, Florida.

ORDINANCE NO.:_____

AN ORDINANCE OF THE BOARD OF COUNTY COMMISSIONERS OF TAYLOR COUNTY, FLORIDA, PURSUANT TO CHAPTER 212.055(3) FLORIDA STATUTES TITLED SMALL COUNTY SURTAX AND PROVIDING FOR A ONE PERCENT SALES TAX; PROVIDING FOR THE COMMENCEMENT OF SAID SURTAX AND THE DURATION OF SAID SURTAX AND PROVIDING THAT THIS IS NOT AN ADDITIONAL SALES TAX AND THAT IT BEGINS WHEN THE BOND ON THE COUNTY'S HOSPITAL IS SATISFIED; PROVIDING FOR PROCEEDS AND DISTRIBUTION; PROVIDING FOR THE USE OF FUNDS; PROVIDING FOR TAXABLE TRANSACTIONS; PROVIDING SEVERABILITY AND PROVIDING FOR AN EFFECTIVE DATE.

WHEREAS, Chapter 212.055(3) Florida Statutes gives the Board of County Commissioners the authority to levy a discretionary sales surtax of one (1) percent provided that the County had a population of 50,000 or less on April 1, 1992, and

WHEREAS, Taylor County meets the above criteria, and

WHEREAS, this is not an additional tax and the tax begins when the bond on the County's hospital is satisfied, i.e., there will only be one one (1) percent sales surtax.

WHEREAS, the levy of said surtax shall be pursuant to Ordinance enacted by an extraordinary vote of the Board of County Commissioners, and

WHEREAS, the Board of County Commissioners of Taylor County have voted by extraordinary vote to impose the above mentioned small county surtax.

THEREFORE, BE IT ORDAINED BY THE BOARD OF COUNTY COMMISSIONERS OF TAYLOR COUNTY, FLORIDA AFTER HAVING DULY ADVERTISED AND HOLD IN REGULAR SESSION BY EXTRAORDINARY VOTE:

Section 1. Imposed.

There is hereby imposed in Taylor County, Florida, a small county surtax, as authorized by Chapter 212.055(3) Florida Statutes levied in the amount of one (1) percent.

Section 2. Duration.

This small county sales surtax will begin when the bond on the County's hospital is satisfied, i.e., there will only be one one (1) percent sales surtax. This small county

surtax shall remain in effect from year to year for so long as authorized by statute unless otherwise amended by ordinance of the Board of County Commissioners.

Section 3. Proceeds; distribution.

The proceeds of the surtax levied under this division shall be distributed to the County and the municipality within the County according to the formula provided in Chapter 218.62 Florida Statutes.

Section 4. Use of Funds.

The proceeds of the surtax levied and any interest accrued thereto shall be used for the following:

(1) Funding or partial funding of capital improvements including but not limited to the canals.

Section 5. Severability. If any phrase or portion of this Ordinance is held invalid or unconstitutional by any court of competent jurisdiction, such portion shall be deemed a separate, distinct and independent provision, and such holding shall not affect the validity of the remaining portion.

Section 6. Effective Date. This Ordinance shall be effective as provided by law.

PASSED and ADOPTED in regular session by the Board of County Commissioners of Taylor County, Florida, on this ____day of _____ _____, 2017.

BOARD OF COUNTY COMMISSIONERS
TAYLOR COUNTY, FLORIDA

BY:_____
PAM FEAGLE, Chairperson

ATTEST:

_____
ANNIE MAE MURPHY, Clerk

NOTICE (PURSUANT TO FLORIDA STATUTE 125.66)

Notice is hereby given that the Board of County Commissioners of Taylor County, Florida will hold a public hearing on the passage of the proposed Ordinance Providing for a One (1) Percent Sales Tax, the public hearing shall be held at the Board of County Commission Meeting Room, Taylor County Courthouse Annex, Old Post Office Building in Perry, Florida, at the regular board meeting on _____, 2017, at _____.

The title of the proposed ordinance is:

AN ORDINANCE OF THE BOARD OF COUNTY COMMISSIONERS OF TAYLOR COUNTY, FLORIDA, PURSUANT TO CHAPTER 212.055(3) FLORIDA STATUTES TITLED SMALL COUNTY SURTAX AND PROVIDING FOR A ONE PERCENT SALES TAX; PROVIDING FOR THE COMMENCEMENT OF SAID SURTAX AND THE DURATION OF SAID SURTAX AND PROVIDING THAT THIS IS NOT AN ADDITIONAL SALES TAX AND THAT IT BEGINS WHEN THE BOND ON THE COUNTY'S HOSPITAL IS SATISFIED; PROVIDING FOR PROCEEDS AND DISTRIBUTION; PROVIDING FOR THE USE OF FUNDS; PROVIDING FOR TAXABLE TRANSACTIONS; PROVIDING SEVERABILITY AND PROVIDING FOR AN EFFECTIVE DATE.

The proposed ordinance may be inspected by the public at the Clerk of the Circuit Court's Office at the Taylor County Courthouse, Perry, Taylor County, Florida.

All members of the public are welcome to attend. Notice is further hereby given, pursuant to Florida Statute 286.0105, that any person or persons deciding to appeal any matter considered at this public hearing will need a record of the hearing and may need to ensure that a verbatim record of the proceedings is made, which record includes the testimony and evidence upon which the appeal is to be based.

DATED this ___ day of _____, 2017, by ANNIE MAE MURPHY, Clerk of the Circuit Court and Clerk of the Board of County Commissioners of Taylor County, Florida.

15

The Bishop Law Firm, P.A.

Attorneys at Law

CONRAD C. BISHOP, JR.
CONRAD C. "SONNY" BISHOP, III

POST OFFICE BOX 167
411 N. WASHINGTON STREET
PERRY, FLORIDA 32348

IN MEMORIAL OF
KATHLEEN MCCARTHY BISHOP 1966-2013

(850) 584-6113
FAX (850) 584-2433

March 27, 2017

VIA E-MAIL AND REGULAR MAIL

Hon. Annie Mae Murphy
Clerk of Court
Post Office Box 620
Perry, Florida 32348

Mr. Ted Lakey
County Administrator
County Offices
201 East Green Street
Perry, Florida 32347

Re: 1 acre from City of Perry to Taylor County for the Fire Tower

Dear Annie Mae and Ted:

Please find enclosed a copy of an e-mail I received from the City Attorney, Mr. Ray Curtis.

It would be my advice to put this on the agenda for the next regular meeting.

If you have a question about this, please give me a call.

Thank you and I hope you are doing fine.

Respectfully,

Conrad C. Bishop, Jr.

CCB/kp

enclosure

The Bishop Law Firm

From: Ray Curtis <ray@thecurtislawfirm.com>
Sent: Wednesday, March 22, 2017 5:08 PM
To: The Bishop Law Firm
Cc: Cindy Mock; Ted Lakey; bob brown
Subject: Re:

Hey Conrad,

The County has advised the City that they do not have the necessary funding in place to construct the fire tower. Also, a Commissioner has publicly stated that he does not like the location and wants the County to look for alternate sites.
The City is willing to finalize the land transfer once these items are resolved. The City does not think it is in either party's interest to move forward with the land transfer, for if either of these items are not resolved, there would be costs and inconvenience involved in the property reverting back to the City.

Thank you and have a nice day!

Ray

On Wed, Mar 22, 2017 at 3:41 PM, The Bishop Law Firm <lawbishop@fairpoint.net> wrote:

Karen Parker

Legal Secretary

The Bishop Law Firm, P.A.

Attorneys at Law

Post Office Box 167

Perry, Fl 32348

850-584-6113

850-584-2433 facsimile

karenparker@fairpoint.net

This electronic communication, including any authorized attachments, contains information from The Bishop Law Firm, P.A. that may be legally privileged, confidential, and exempt from disclosure under applicable law. This communication also may include content that was not originally generated by the firm. If you are not the intended recipient, any use or dissemination of this communication is strictly prohibited. If you have received this communication in error, please notify the sender immediately and delete it from all computers on which it may be stored. In addition, if you are not currently a client of the firm, this communication is not to be construed as establishing an attorney-client relationship

--

Ray Curtis

The Curtis Law Firm

A Professional Association

103 North Jefferson Street

Perry, FL 32347

(850) 584-5299

(850) 290-7448 fax

The preceding electronic mail message (including any attachments) contains information the sender deems confidential and constitute non-public information. It is intended to be conveyed only to the designated recipient(s). If you are not an intended recipient of this message, please notify the sender by replying to this message and then delete it from your system. Use, dissemination, distribution, or reproduction of the foregoing electronic mail (including any attachments) by unintended recipients is not authorized by the sender and may be unlawful.

TAYLOR COUNTY BOARD OF COMMISSIONERS	
County Commission Agenda Item	
SUBJECT/TITLE:	THE BOARD TO CONSIDER AND REVIEW AN AD VALOREM PROPERTY TAX EXEMPTION APPLICATION FROM SAN PEDRO INVESTMENTS, LLC WHICH WAS TRANSMITTED TO THE BOARD BY THE TCDA.
MEETING DATE REQUESTED:	APRIL 3, 2017

Statement of Issue: **THE TCDA BOARD OF DIRECTOR'S MET FEBRUARY 16, 2017 AND REVIEWED AN AD VALOREM PROPERTY TAX EXEMPTION APPLICATION FROM SAN PEDRO INVESTMENTS, LLC FOR A PROJECT THAT WAS COMPLETED IN 2016. THE BOARD HEARD A PRESENTATION FROM SAN PEDRO, AFTER WHICH IT VOTED TO TRANSMIT THE APPLICATION TO THE COUNTY WITHOUT A RECOMMENDATION.**

Recommended Action:

Fiscal Impact:

Budgeted Expense:

Submitted By: **SAN PEDRO INVESTMENTS, LLC (MICHAEL LYNN)**

Contact:

SUPPLEMENTAL MATERIAL / ISSUE ANALYSIS

History, Facts & Issues:

Options:

Attachments: TCDA LETTER AND APPLICATION

NORTH FLORIDA'S
RISING STAR

March 14, 2017

Dear Mr. Lakey,

The TCDA Board of Director's met February 16, 2017 and reviewed an Ad Valorem Property Tax Exemption Application from San Pedro Investments, LLC for a project that was completed in 2016. The Board heard a presentation from San Pedro, after which it voted to transmit the application to the County without a recommendation.

Sincerely,

Randy Newman
Chairman
Taylor County Development Authority

TAYLOR COUNTY DEVELOPMENT AUTHORITY
103 E. Ellis St., Perry, FL 32348 | floridarisingstar.com | 850-584-5627

Exhibit C
SUPPORT PLAN OPTIONS AND PRICING WORKSHEET

Maintenance and Support Agreement # SA# 001880-003 **Date** March 16, 2017

New Term Effective **Start** May 1, 2017 **End** April 30, 2018

CUSTOMER:	**Taylor County Jail**	**BILLING AGENCY:**	**Taylor County Commissioner**
Address (1):	108 N. Jefferson St.	Address (1):	PO Box 620
Address (2):		Address (2):	
CITY, STATE, ZIP CODE:	Perry, FL 32347	CITY, STATE, ZIP CODE:	Perry, FL 32348-0620
CONTACT NAME:	**Lt. Eva Leverette**	**CONTACT NAME:**	**Accounts Payable**
CONTACT TITLE		CONTACT TITLE	
TELEPHONE:	(850)584-4333	TELEPHONE:	
FAX:		FAX:	
Email:	Eva.Leverette@taylorsherrifffl.org	Email:	bccpayables@taylorclerk.com

For support on products below, please contact Customer Support at (800) 734-6241 or email at cscenter@morpho.com.

☐ AFIS System ☒ LiveScan™ Station ☐ Morpho™ BIS System

STANDARD SUPPORT	ANNUAL FEE
☒ ***Advantage* – Software Support** ♦ 8 a.m. – 5 p.m. Monday to Friday PPM ♦ Unlimited Telephone Support ♦ Remote Dial-In Analysis ♦ Supplemental Releases & Updates ♦ Standard Releases & Updates ♦ Automatic Call Escalation ♦ Software Customer Alert Bulletins ♦ Telephone Response: 2 Hour	$ 4,695.54
STANDARD SUPPORT TOTAL	**$ 4,695.54**

SUPPORT OPTIONS	ANNUAL FEE
☒ **On-Site Hardware Support** ♦ 8 a.m. – 5 p.m. Monday-Friday PPM ♦ Next day PPM On-site Response ♦ Hardware Vendor Liaison ♦ Defective Parts Replacement ♦ Escalation Support ♦ Hardware Customer Alert Bulletins ♦ Hardware Service Reporting ♦ Product Repair ♦ Equipment Inventory Detail Management	$ Included
☒ **Parts Support** ♦ Parts Ordered & Shipped Next Business Day ♦ Parts Customer Alert Bulletins ♦ *If customer is providing their own on-site hardware support, the following applies:* * Customer Orders & Replaces Parts * Telephone Technical Support for Parts Replacement Available	$ Included
☐ **UPLIFTS** ♦ Increase PPM to _____ ♦ Increase Response Time to _____	$ N/A $ N/A
SUPPORT OPTIONS TOTAL	**$ Included as checked**

THIRD PARTY SUPPORT	ANNUAL FEE
☐ **THIRD PARTY VENDOR NAME:** ♦ **TERM DATE:** ♦ **COVERAGE:**	$ N/A
THIRD PARTY SUPPORT TOTAL	**$ N/A**

USERS CONFERENCE – NORTH AMERICA	ANNUAL FEE
☐ **Users Conference Attendance ($3,250 per Attendee)** Year _____ Number Attendees Requested _____ • Registration fee • Roundtrip travel for event • Ground transportation to/from the conference airport to the conference hotel • Hotel accommodations • Daily meals	$ N/A
USERS CONFERENCE TOTAL	**$ N/A**

OTHER AVAILABLE OPTIONS	ANNUAL FEE
☐ LiveScan 3000 Prism Protection $1,500 unit/year – Covers labor and material fee for replacement of one (1) prism per year	$ N/A
☐ Other:	$ N/A
OTHER AVAILABLE OPTIONS TOTAL	**$ N/A**

Prepared by: Megan Mincheff (714)688-3120 Email: megan.mincheff.ext@morpho.com

SUPPORT TOTAL*	**$ 4,695.54**
USERS CONFERENCE TOTAL	**$ N/A**
FULL TERM FEE GRAND TOTAL*	**$ 4,695.54**

**Exclusive of taxes if applicable*

PLEASE PROVIDE A COPY OF YOUR CURRENT TAX EXEMPTION CERTIFICATE (if applicable)